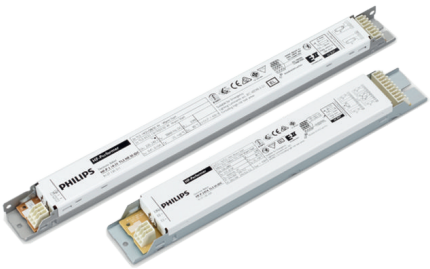

An energy-efficient solution

HF-Performer III for TL5 lamps

HF-Performer III TL5 is a sustainable, slim and high-frequency electronic ballast for TL5 and TL5 Eco fluorescent lamps. It is ideal for applications where high energy efficiency is required. The HF-Performer III range has a robust design, meets all relevant international safety and performance standards and is energy-efficient (CELMA EEI A2 BAT).

Benefits

- Optimal savings can be achieved using HF-PIII together with TL5 ECO lamps (system solution).
- The programmed start enables the lamp to be switched on and off without reducing useful lamp life.
- DC emergency operation in line with IEC/EN 60598-2-22 luminaire norms
- Suitable for luminaires in protection class I and, after testing, class II

Features

- 50,000-hour lifetime at maximum case temperature, combined with over 60,000 on/off switches on one lamp
- Programmed, flicker-free, pre-heated start (< 1.0 s) which allows the lamp to be switched on and off without reducing useful lamp life
- Active power factor correction to ensure constant light, irrespective of mains-voltage fluctuations
- The unit is protected against excessive mains voltage and incorrect connections
- The universal connector Wago 251 offers the flexibility for horizontal-manual or push-in robot wiring or vertical ALF-robot wiring.

HF-Performer III for TL5 lamps

Application

- Used with movement-detection control systems like Philips OccuPlus
- Indoor applications, such as office buildings, hospitals, supermarkets, department stores, industrial premises and schools
- Class I outdoor applications, e.g. industrial premises and parking lot

Versions

Lamp Driver, eFluo, HF-P 1 14-35 TL5 HE III 220-240V

Lamp Driver, eFluo, HF-P 2 14-35 TL5 HE III 220-240V

Dimensional drawing

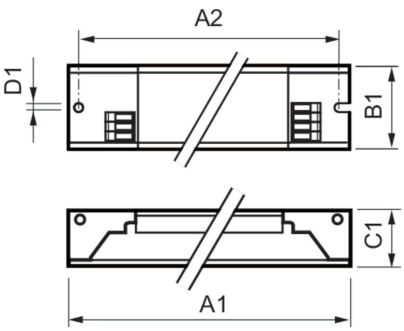

Product	D1	C1	A1	A2	B1
HF-P 1 14-35 TL5 HE III 220-240V	4.2 mm	22.0 mm	360.0 mm	350.0 mm	30.0 mm
HF-P 149 TL5 HO III 220-240V 50/60Hz IDC	4.2 mm	22.0 mm	360.0 mm	350.0 mm	30.0 mm
HF-P 154/155 TL5 HO/PLL III 220-240V IDC	4.2 mm	22.0 mm	360.0 mm	350.0 mm	30.0 mm
HF-P 180 TL5 III 220-240V 50/60Hz	4.2 mm	21.0 mm	360.0 mm	350.0 mm	30.0 mm
HF-P 2 14-35 TL5 HE III 220-240V	4.2 mm	22.0 mm	360.0 mm	350.0 mm	30.0 mm
HF-P 2 24/39 TL5 III 220-240V 50/60Hz	4.2 mm	21.0 mm	360.0 mm	350.0 mm	30.0 mm
HF-P 249 TL5 HO III 220-240V 50/60Hz IDC	4.2 mm	22.0 mm	360.0 mm	350.0 mm	30.0 mm
HF-P 254/255 TL5 HO/PLL III 220-240V IDC	4.2 mm	22.0 mm	360.0 mm	350.0 mm	30.0 mm
HF-P 280 TL5/PL-L III 220-240V 50/60Hz	4.2 mm	21.0 mm	425.0 mm	415.0 mm	30.0 mm
HF-P 3/4 14 TL5 III 220-240V 50/60Hz IDC	4.2 mm	21.0 mm	280.0 mm	265.0 mm	39.0 mm

Operating and Electrical	
Input frequency	50 to 60 Hz
Input Voltage	220 to 240 V
Line Frequency	50 to 60 Hz
Approval and Application	
Energy efficiency index	A2 BAT

Operating and Electrical

HF-Performer III for TL5 lamps

Order Code	Full Product Name	Number of products on MCB (16 A type B) (nom.)
913713031066	HF-P 1 14-35 TL5 HE III 220-240V	28
913713031166	HF-P 2 14-35 TL5 HE III 220-240V	28
913713028266	HF-P 154/155 TL5 HO/PLL III 220-240V IDC	28
913713028366	HF-P 254/255 TL5 HO/PLL III 220-240V IDC	12
913713028066	HF-P 149 TL5 HO III 220-240V 50/60Hz IDC	28

Order Code	Full Product Name	Number of products on MCB (16 A type B) (nom.)
913713028166	HF-P 249 TL5 HO III 220-240V 50/60Hz IDC	12
913713033966	HF-P 3/4 14 TL5 III 220-240V 50/60Hz IDC	28
913713034166	HF-P 2 24/39 TL5 III 220-240V 50/60Hz	20
913713034266	HF-P 180 TL5 III 220-240V 50/60Hz	20
913713034366	HF-P 280 TL5/PL-L III 220-240V 50/60Hz	8

Mechanical and Housing

Order Code	Full Product Name	Housing
913713031066	HF-P 1 14-35 TL5 HE III 220-240V	L360x30x22
913713031166	HF-P 2 14-35 TL5 HE III 220-240V	L360x30x22
913713028266	HF-P 154/155 TL5 HO/PLL III 220-240V IDC	L360x30x22
913713028366	HF-P 254/255 TL5 HO/PLL III 220-240V IDC	L360x30x22
913713028066	HF-P 149 TL5 HO III 220-240V 50/60Hz IDC	L360x30x22

Order Code	Full Product Name	Housing
913713028166	HF-P 249 TL5 HO III 220-240V 50/60Hz IDC	L360x30x22
913713033966	HF-P 3/4 14 TL5 III 220-240V 50/60Hz IDC	L 280x40x21
913713034166	HF-P 2 24/39 TL5 III 220-240V 50/60Hz	L 360x30x21
913713034266	HF-P 180 TL5 III 220-240V 50/60Hz	L 360x30x21
913713034366	HF-P 280 TL5/PL-L III 220-240V 50/60Hz	L 425x30x21

© 2024 Signify Holding All rights reserved. Signify does not give any representation or warranty as to the accuracy or completeness of the information included herein and shall not be liable for any action in reliance thereon. The information presented in this document is not intended as any commercial offer and does not form part of any quotation or contract, unless otherwise agreed by Signify. All trademarks are owned by Signify Holding or their respective owners.