PHILIPS

Lighting



LuxSpace square, recessed – high efficiency, visual comfort and a stylish design

LuxSpace square, recessed

Customers are looking to optimize all their resources, and that means not just their running costs (energy, etc.) but also their human resources. Energy savings are therefore a priority, but they must not have an adverse effect on the well-being of employees, who need a pleasant environment in order to be more productive, or on customers, who want to enjoy their shopping experience. LuxSpace provides the perfect combination of efficiency, light comfort and design, without compromising on lighting performance (color rendering and color uniformity). It offers a wide choice of options for creating the desired ambience, no matter the application.

Benefits

- Best-in-class efficacy
- Creates a gentle, natural light, ensuring visual comfort
- Perfect integration with the ceiling thanks to the thin, narrow rim; rimless version ideal for integration into plaster ceilings

LuxSpace square, recessed

Features

- Choice of four optics: high-gloss, facetted, matt and white
- Rim colors: high-gloss metalized, white (RAL9010), grey, black (RAL9004) as standard (any other RAL color possible upon request)
- Rimless version available
- Compliant for central emergency lighting with DC
- Multiple additional options: emergency lighting (single battery 3 hours), through-wiring

Application

- Offices
- Retail
- Hospitals
- Hotels
- Airports

Versions



IPPR DN570Bi 0051

Dimensional drawing

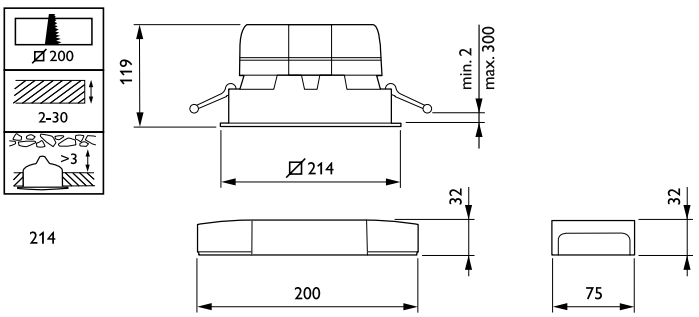

LuxSpace square, recessed

Polar Wide Diagrams

Polar Normal (separate) - DN572BI - 910505100947

© 2024 Signify Holding All rights reserved. Signify does not give any representation or warranty as to the accuracy or completeness of the information included herein and shall not be liable for any action in reliance thereon. The information presented in this document is not intended as any commercial offer and does not form part of any quotation or contract, unless otherwise agreed by Signify. All trademarks are owned by Signify Holding or their respective owners.