# De nieuwe generatie T5 LED-TL-verlichting op netspanning

## MASTER LEDtube Mains T5

De nieuwe Philips MASTER LEDtube Mains T5 zorgt voor eenvoud in je verlichtingsproject. Je hoeft geen aandacht meer te schenken aan de drivertechnologie. Dankzij een uniek ontwerp laat de Philips MASTER LEDtube Mains T5 zich installeren in armaturen die werken op een netspanningsaansluiting. Dus eenvoudig in te passen! . De veilige, betrouwbare en gemakkelijk te installeren Philips MASTER LEDtube Mains T5 is het perfecte alternatief voor standaard fluorescentiebuizen en biedt hoge energiebesparingen en lagere onderhoudskosten.

### Voordelen

- Lagere operationele kosten dankzij lager energieverbruik.
- Lagere onderhoudskosten dankzij de langere levensduur ten opzichte van conventionele lampen.
- Snelste en eenvoudigste manier om een bestaande armatuur op te waarderen naar LED-technologie; volledig veilig product en installatieproces.

### Kenmerken

- Vervanger voor bestaande T5-lampen. Werkt met aansluiting op de netspanning
- Energiebesparingen in vergelijking met fluorescentiebuizen.
- Lange levensduur
- Geen kwik

### Toepassing

- Kantoren, onderwijsinstellingen, detailhandel
- Industriële ruimten, magazijnen, grootwinkelbedrijven



Wijziging van gegevens voorbehouden

# MASTER LEDtube Mains T5

## Versions

**MAS LEDtube HE T5 Mains EU 20240507**

## Maatschets

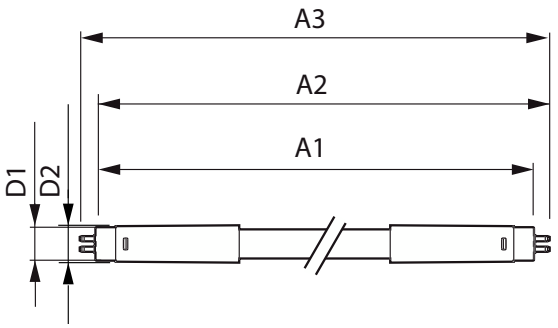


| Product | D1 | D2 | A1 | A2 | A3 |
|---|---|---|---|---|---|
| MAS LEDtube 1200mm HE 16.5W 830 T5 EU | 15,7 mm | 19 mm | 1.149 mm | 1.156,1 mm | 1.163,2 mm |
| MAS LEDtube 1200mm HE 16.5W 840 T5 EU | 15,7 mm | 19 mm | 1.149 mm | 1.156,1 mm | 1.163,2 mm |
| MAS LEDtube 1200mm HE 16.5W 865 T5 EU | 15,7 mm | 19 mm | 1.149 mm | 1.156,1 mm | 1.163,2 mm |
| MAS LEDtube 1200mm HO 26W 830 T5 | 15,5 mm | 17,1 mm | 1.149 mm | 1.156 mm | 1.163 mm |
| MAS LEDtube 1200mm HO 26W 840 T5 | 15,5 mm | 17,1 mm | 1.149 mm | 1.156 mm | 1.163 mm |
| MAS LEDtube 1200mm HO 26W 865 T5 | 15,5 mm | 17,1 mm | 1.149 mm | 1.156 mm | 1.163 mm |
| MAS LEDtube 1500mm HE 20W 830 T5 EU | 15,7 mm | 19 mm | 1.449 mm | 1.456,1 mm | 1.463,2 mm |
| MAS LEDtube 1500mm HE 20W 840 T5 EU | 15,7 mm | 19 mm | 1.449 mm | 1.456,1 mm | 1.463,2 mm |
| MAS LEDtube 1500mm HE 20W 865 T5 EU | 15,7 mm | 19 mm | 1.449 mm | 1.456,1 mm | 1.463,2 mm |
| MAS LEDtube 1500mm HO 26W 830 T5 | 15,5 mm | 17,1 mm | 1.449 mm | 1.456 mm | 1.463 mm |
| MAS LEDtube 1500mm HO 26W 840 T5 | 15,5 mm | 17,1 mm | 1.449 mm | 1.456 mm | 1.463 mm |
| MAS LEDtube 1500mm HO 26W 865 T5 | 15,5 mm | 17,1 mm | 1.449 mm | 1.456 mm | 1.463 mm |
| MAS LEDtube 1500mm UO 36W 830 T5 | 15,5 mm | 18,8 mm | 1.449 mm | 1.456,1 mm | 1.463,2 mm |
| MAS LEDtube 1500mm UO 36W 840 T5 | 15,5 mm | 18,8 mm | 1.449 mm | 1.456,1 mm | 1.463,2 mm |
| MAS LEDtube 1500mm UO 36W 865 T5 | 15,5 mm | 18,8 mm | 1.449 mm | 1.456,1 mm | 1.463,2 mm |
| MAS LEDtube 600mm HE 7W 830 T5 EU | 15,7 mm | 19 mm | 549 mm | 556,1 mm | 563,2 mm |
| MAS LEDtube 600mm HE 7W 840 T5 EU | 15,7 mm | 19 mm | 549 mm | 556,1 mm | 563,2 mm |
| MAS LEDtube 600mm HE 7W 865 T5 EU | 15,7 mm | 19 mm | 549 mm | 556,1 mm | 563,2 mm |
| MAS LEDtube 600mm HO 10.5W 830 T5 | | 19 mm | 549 mm | 556,1 mm | 563,2 mm |
| MAS LEDtube 600mm HO 10.5W 840 T5 | | 19 mm | 549 mm | 556,1 mm | 563,2 mm |
| MAS LEDtube 600mm HO 10.5W 865 T5 | | 19 mm | 549 mm | 556,1 mm | 563,2 mm |
| MAS LEDtube 900mm HE 11.5W 830 T5 EU | 15,7 mm | 19 mm | 849 mm | 856,1 mm | 863,2 mm |
| MAS LEDtube 900mm HE 11.5W 840 T5 EU | 15,7 mm | 19 mm | 849 mm | 856,1 mm | 863,2 mm |
| MAS LEDtube 900mm HE 11.5W 865 T5 EU | 15,7 mm | 19 mm | 849 mm | 856,1 mm | 863,2 mm |
| MAS LEDtube 900mm HO 18.5W 830 T5 | | 19 mm | 849 mm | 856,1 mm | 863,2 mm |

# MASTER LEDtube Mains T5

## Maatschets

| Product | D1 | D2 | A1 | A2 | A3 |
|---|---|---|---|---|---|
| MAS LEDtube 900mm HO 18.5W 840 T5 | | 19 mm | 849 mm | 856,1 mm | 863,2 mm |
| MAS LEDtube 900mm HO 18.5W 865 T5 | | 19 mm | 849 mm | 856,1 mm | 863,2 mm |

| Algemene informatie | |
|---|---|
| **Lampvoet** | G5 |
| **Schakelcyclus** | 200.000 |
| **Gegevens lichttechniek** | |
| **Bundelhoek (nom.)** | 200 graden |
| **Kleurweergave-index (CRI)** | 80 |
| **LLMF bij einde nominale levensduur (nom.)** | 70 % |
| **Bedrijfs- en elektrische gegevens** | |
| **Ingangsfrequentie** | 50 tot 60 Hz |
| **Opstarttijd (nom.)** | 0,5 s |
| **Dimbaarheid en regelsystemen** | |
| **Dimbaar** | Nee |
| **Eigenschappen behuizing en afmetingen** | |
| **Lampafwerking** | Mat |
| **Lampvorm** | T5 |

## Algemene informatie

| Order Code | Full Product Name | Nominale levensduur |
|---|---|---|
| 8719514290501 | MAS LEDtube 1500mm UO 36W 830 T5 | 50.000 hr |
| 8719514290525 | MAS LEDtube 1500mm UO 36W 840 T5 | 50.000 hr |
| 8719514290549 | MAS LEDtube 1500mm UO 36W 865 T5 | 50.000 hr |
| 8718696819210 | MAS LEDtube 1200mm HO 26W 830 T5 | 60.000 hr |
| 8718696819234 | MAS LEDtube 1200mm HO 26W 840 T5 | 60.000 hr |
| 8718696819258 | MAS LEDtube 1200mm HO 26W 865 T5 | 60.000 hr |
| 8718696819296 | MAS LEDtube 1500mm HO 26W 830 T5 | 60.000 hr |
| 8718696819319 | MAS LEDtube 1500mm HO 26W 840 T5 | 60.000 hr |
| 8718696819333 | MAS LEDtube 1500mm HO 26W 865 T5 | 60.000 hr |
| 8719514334373 | MAS LEDtube 1500mm HE 20W 830 T5 EU | 60.000 hr |
| 8719514334397 | MAS LEDtube 1500mm HE 20W 840 T5 EU | 60.000 hr |
| 8719514334410 | MAS LEDtube 1500mm HE 20W 865 T5 EU | 60.000 hr |
| 8719514334311 | MAS LEDtube 1200mm HE 16.5W 830 T5 EU | 60.000 hr |
| 8719514334335 | MAS LEDtube 1200mm HE 16.5W 840 T5 EU | 60.000 hr |
| 8719514334359 | MAS LEDtube 1200mm HE 16.5W 865 T5 EU | 60.000 hr |
| 8720169270626 | MAS LEDtube 900mm HE 11.5W 830 T5 EU | 60.000 hr |
| 8720169270640 | MAS LEDtube 900mm HE 11.5W 840 T5 EU | 60.000 hr |
| 8720169270664 | MAS LEDtube 900mm HE 11.5W 865 T5 EU | 60.000 hr |
| 8720169275218 | MAS LEDtube 600mm HO 10.5W 830 T5 | 60.000 hr |
| 8720169275317 | MAS LEDtube 600mm HO 10.5W 840 T5 | 60.000 hr |
| 8720169275232 | MAS LEDtube 600mm HO 10.5W 865 T5 | 60.000 hr |
| 8720169275256 | MAS LEDtube 900mm HO 18.5W 830 T5 | 60.000 hr |
| 8720169275270 | MAS LEDtube 900mm HO 18.5W 840 T5 | 60.000 hr |
| 8720169275294 | MAS LEDtube 900mm HO 18.5W 865 T5 | 60.000 hr |
| 8720169311695 | MAS LEDtube 600mm HE 7W 830 T5 EU | 60.000 hr |
| 8720169306820 | MAS LEDtube 600mm HE 7W 840 T5 EU | 60.000 hr |
| 8720169306844 | MAS LEDtube 600mm HE 7W 865 T5 EU | 60.000 hr |

## Gegevens lichttechniek

| Order Code | Full Product Name | Gecorreleerde kleurtemperatuur (nom.) | Kleurcode | Lichtstroom |
|---|---|---|---|---|
| 8719514290501 | MAS LEDtube 1500mm UO 36W 830 T5 | 3000 K | 830 | 5.200 lm |
| 8719514290525 | MAS LEDtube 1500mm UO 36W 840 T5 | 4000 K | 840 | 5.600 lm |

| Order Code | Full Product Name | Gecorreleerde kleurtemperatuur (nom.) | Kleurcode | Lichtstroom |
|---|---|---|---|---|
| 8719514290549 | MAS LEDtube 1500mm UO 36W 865 T5 | 6500 K | 865 | 5.600 lm |
| 8718696819210 | MAS LEDtube 1200mm HO 26W 830 T5 | 3000 K | 830 | 3.600 lm |

# MASTER LEDtube Mains T5

| Order Code | Full Product Name | Gecorreleerde kleurtemperatuur (nom.) | Kleurcode | Lichtstroom |
|---|---|---|---|---|
| 8718696819234 | MAS LEDtube 1200mm HO 26W 840 T5 | 4000 K | 840 | 3.900 lm |
| 8718696819258 | MAS LEDtube 1200mm HO 26W 865 T5 | 6500 K | 865 | 3.900 lm |
| 8718696819296 | MAS LEDtube 1500mm HO 26W 830 T5 | 3000 K | 830 | 3.600 lm |
| 8718696819319 | MAS LEDtube 1500mm HO 26W 840 T5 | 4000 K | 840 | 3.900 lm |
| 8718696819333 | MAS LEDtube 1500mm HO 26W 865 T5 | 6500 K | 865 | 3.900 lm |
| 8719514334373 | MAS LEDtube 1500mm HE 20W 830 T5 EU | 3000 K | 830 | 2.800 lm |
| 8719514334397 | MAS LEDtube 1500mm HE 20W 840 T5 EU | 4000 K | 840 | 3.000 lm |
| 8719514334410 | MAS LEDtube 1500mm HE 20W 865 T5 EU | 6500 K | 865 | 3.000 lm |
| 8719514334311 | MAS LEDtube 1200mm HE 16.5W 830 T5 EU | 3000 K | 830 | 2.300 lm |
| 8719514334335 | MAS LEDtube 1200mm HE 16.5W 840 T5 EU | 4000 K | 840 | 2.500 lm |
| 8719514334359 | MAS LEDtube 1200mm HE 16.5W 865 T5 EU | 6500 K | 865 | 2.500 lm |
| 8720169270626 | MAS LEDtube 900mm HE 11.5W 830 T5 EU | 3000 K | 830 | 1.600 lm |

| Order Code | Full Product Name | Gecorreleerde kleurtemperatuur (nom.) | Kleurcode | Lichtstroom |
|---|---|---|---|---|
| 8720169270640 | MAS LEDtube 900mm HE 11.5W 840 T5 EU | 4000 K | 840 | 1.700 lm |
| 8720169270664 | MAS LEDtube 900mm HE 11.5W 865 T5 EU | 6500 K | 865 | 1.700 lm |
| 8720169275218 | MAS LEDtube 600mm HO 10.5W 830 T5 | 3000 K | 830 | 1.500 lm |
| 8720169275317 | MAS LEDtube 600mm HO 10.5W 840 T5 | 4000 K | 840 | 1.600 lm |
| 8720169275232 | MAS LEDtube 600mm HO 10.5W 865 T5 | 6500 K | 865 | 1.600 lm |
| 8720169275256 | MAS LEDtube 900mm HO 18.5W 830 T5 | 3000 K | 830 | 2.600 lm |
| 8720169275270 | MAS LEDtube 900mm HO 18.5W 840 T5 | 4000 K | 840 | 2.800 lm |
| 8720169275294 | MAS LEDtube 900mm HO 18.5W 865 T5 | 6500 K | 865 | 2.800 lm |
| 8720169311695 | MAS LEDtube 600mm HE 7W 830 T5 EU | 3000 K | 830 | 1.000 lm |
| 8720169306820 | MAS LEDtube 600mm HE 7W 840 T5 EU | 4000 K | 840 | 1.050 lm |
| 8720169306844 | MAS LEDtube 600mm HE 7W 865 T5 EU | 6500 K | 865 | 1.050 lm |

## Bedrijfs- en elektrische gegevens

| Order Code | Full Product Name | Ingangsfrequentie | Energieverbruik |
|---|---|---|---|
| 8719514290501 | MAS LEDtube 1500mm UO 36W 830 T5 | 50 to 60 Hz | 36 W |
| 8719514290525 | MAS LEDtube 1500mm UO 36W 840 T5 | 50 to 60 Hz | 36 W |
| 8719514290549 | MAS LEDtube 1500mm UO 36W 865 T5 | 50 to 60 Hz | 36 W |
| 8718696819210 | MAS LEDtube 1200mm HO 26W 830 T5 | 50 to 60 Hz | 26 W |
| 8718696819234 | MAS LEDtube 1200mm HO 26W 840 T5 | 50 to 60 Hz | 26 W |

| Order Code | Full Product Name | Ingangsfrequentie | Energieverbruik |
|---|---|---|---|
| 8718696819258 | MAS LEDtube 1200mm HO 26W 865 T5 | 50 to 60 Hz | 26 W |
| 8718696819296 | MAS LEDtube 1500mm HO 26W 830 T5 | 50 to 60 Hz | 26 W |
| 8718696819319 | MAS LEDtube 1500mm HO 26W 840 T5 | 50 to 60 Hz | 26 W |
| 8718696819333 | MAS LEDtube 1500mm HO 26W 865 T5 | 50 to 60 Hz | 26 W |
| 8719514334373 | MAS LEDtube 1500mm HE 20W 830 T5 EU | 50 to 60 Hz | 20 W |

# MASTER LEDtube Mains T5

| Order Code | Full Product Name | Ingangsfrequentie | Energieverbruik |
|---|---|---|---|
| 8719514334397 | MAS LEDtube 1500mm HE 20W 840 T5 EU | 50 to 60 Hz | 20 W |
| 8719514334410 | MAS LEDtube 1500mm HE 20W 865 T5 EU | 50 to 60 Hz | 20 W |
| 8719514334311 | MAS LEDtube 1200mm HE 16.5W 830 T5 EU | 50 to 60 Hz | 16,5 W |
| 8719514334335 | MAS LEDtube 1200mm HE 16.5W 840 T5 EU | 50 to 60 Hz | 16,5 W |
| 8719514334359 | MAS LEDtube 1200mm HE 16.5W 865 T5 EU | 50 to 60 Hz | 16,5 W |
| 8720169270626 | MAS LEDtube 900mm HE 11.5W 830 T5 EU | 50 to 60 Hz | 11,5 W |
| 8720169270640 | MAS LEDtube 900mm HE 11.5W 840 T5 EU | 50 to 60 Hz | 11,5 W |
| 8720169270664 | MAS LEDtube 900mm HE 11.5W 865 T5 EU | 50 to 60 Hz | 11,5 W |
| 8720169275218 | MAS LEDtube 600mm HO 10.5W 830 T5 | - | 10,5 W |

| Order Code | Full Product Name | Ingangsfrequentie | Energieverbruik |
|---|---|---|---|
| 8720169275317 | MAS LEDtube 600mm HO 10.5W 840 T5 | - | 10,5 W |
| 8720169275232 | MAS LEDtube 600mm HO 10.5W 865 T5 | - | 10,5 W |
| 8720169275256 | MAS LEDtube 900mm HO 18.5W 830 T5 | - | 18,5 W |
| 8720169275270 | MAS LEDtube 900mm HO 18.5W 840 T5 | - | 18,5 W |
| 8720169275294 | MAS LEDtube 900mm HO 18.5W 865 T5 | - | 18,5 W |
| 8720169311695 | MAS LEDtube 600mm HE 7W 830 T5 EU | - | 7 W |
| 8720169306820 | MAS LEDtube 600mm HE 7W 840 T5 EU | - | 7 W |
| 8720169306844 | MAS LEDtube 600mm HE 7W 865 T5 EU | - | 7 W |

## Operationele temperatuur

| Order Code | Full Product Name | T-behuizing maximaal (nom.) |
|---|---|---|
| 8719514290501 | MAS LEDtube 1500mm UO 36W 830 T5 | 75 °C |
| 8719514290525 | MAS LEDtube 1500mm UO 36W 840 T5 | 75 °C |
| 8719514290549 | MAS LEDtube 1500mm UO 36W 865 T5 | 75 °C |
| 8718696819210 | MAS LEDtube 1200mm HO 26W 830 T5 | 65 °C |
| 8718696819234 | MAS LEDtube 1200mm HO 26W 840 T5 | 65 °C |
| 8718696819258 | MAS LEDtube 1200mm HO 26W 865 T5 | 65 °C |
| 8718696819296 | MAS LEDtube 1500mm HO 26W 830 T5 | 65 °C |
| 8718696819319 | MAS LEDtube 1500mm HO 26W 840 T5 | 65 °C |
| 8718696819333 | MAS LEDtube 1500mm HO 26W 865 T5 | 65 °C |
| 8719514334373 | MAS LEDtube 1500mm HE 20W 830 T5 EU | 55 °C |
| 8719514334397 | MAS LEDtube 1500mm HE 20W 840 T5 EU | 55 °C |
| 8719514334410 | MAS LEDtube 1500mm HE 20W 865 T5 EU | 55 °C |
| 8719514334311 | MAS LEDtube 1200mm HE 16.5W 830 T5 EU | 55 °C |
| 8719514334335 | MAS LEDtube 1200mm HE 16.5W 840 T5 EU | 55 °C |

| Order Code | Full Product Name | T-behuizing maximaal (nom.) |
|---|---|---|
| 8719514334359 | MAS LEDtube 1200mm HE 16.5W 865 T5 EU | 55 °C |
| 8720169270626 | MAS LEDtube 900mm HE 11.5W 830 T5 EU | 45 °C |
| 8720169270640 | MAS LEDtube 900mm HE 11.5W 840 T5 EU | 45 °C |
| 8720169270664 | MAS LEDtube 900mm HE 11.5W 865 T5 EU | 45 °C |
| 8720169275218 | MAS LEDtube 600mm HO 10.5W 830 T5 | 60 °C |
| 8720169275317 | MAS LEDtube 600mm HO 10.5W 840 T5 | 60 °C |
| 8720169275232 | MAS LEDtube 600mm HO 10.5W 865 T5 | 60 °C |
| 8720169275256 | MAS LEDtube 900mm HO 18.5W 830 T5 | 60 °C |
| 8720169275270 | MAS LEDtube 900mm HO 18.5W 840 T5 | 60 °C |
| 8720169275294 | MAS LEDtube 900mm HO 18.5W 865 T5 | 60 °C |
| 8720169311695 | MAS LEDtube 600mm HE 7W 830 T5 EU | 50 °C |
| 8720169306820 | MAS LEDtube 600mm HE 7W 840 T5 EU | 50 °C |
| 8720169306844 | MAS LEDtube 600mm HE 7W 865 T5 EU | 50 °C |

## Keurmerken en classificaties

| Order Code | Full Product Name | Bereik omgevingstemperatuur | Energieverbruik kWh/1.000 uur |
|---|---|---|---|
| 8719514290501 | MAS LEDtube 1500mm UO 36W 830 T5 | -20 °C t/m 45 °C | 36 kWh |
| 8719514290525 | MAS LEDtube 1500mm UO 36W 840 T5 | -20 °C t/m 45 °C | 36 kWh |
| 8719514290549 | MAS LEDtube 1500mm UO 36W 865 T5 | -20 °C t/m 45 °C | 36 kWh |

| Order Code | Full Product Name | Bereik omgevingstemperatuur | Energieverbruik kWh/1.000 uur |
|---|---|---|---|
| 8718696819210 | MAS LEDtube 1200mm HO 26W 830 T5 | -20 tot +45 °C | 26 kWh |
| 8718696819234 | MAS LEDtube 1200mm HO 26W 840 T5 | -20 tot +45 °C | 26 kWh |
| 8718696819258 | MAS LEDtube 1200mm HO 26W 865 T5 | -20 tot +45 °C | 26 kWh |

# MASTER LEDtube Mains T5

| Order Code | Full Product Name | Bereik omgevingstemperatuur | Energieverbruik kWh/1.000 uur |
|---|---|---|---|
| 8718696819296 | MAS LEDtube 1500mm HO 26W 830 T5 | -20 tot +45 °C | 26 kWh |
| 8718696819319 | MAS LEDtube 1500mm HO 26W 840 T5 | -20 tot +45 °C | 26 kWh |
| 8718696819333 | MAS LEDtube 1500mm HO 26W 865 T5 | -20 tot +45 °C | 26 kWh |
| 8719514334373 | MAS LEDtube 1500mm HE 20W 830 T5 EU | -20 tot +45 °C | 20 kWh |
| 8719514334397 | MAS LEDtube 1500mm HE 20W 840 T5 EU | -20 tot +45 °C | 20 kWh |
| 8719514334410 | MAS LEDtube 1500mm HE 20W 865 T5 EU | -20 tot +45 °C | 20 kWh |
| 8719514334311 | MAS LEDtube 1200mm HE 16.5W 830 T5 EU | -20 tot +45 °C | 17 kWh |
| 8719514334335 | MAS LEDtube 1200mm HE 16.5W 840 T5 EU | -20 tot +45 °C | 17 kWh |
| 8719514334359 | MAS LEDtube 1200mm HE 16.5W 865 T5 EU | -20 tot +45 °C | 17 kWh |
| 8720169270626 | MAS LEDtube 900mm HE 11.5W 830 T5 EU | -20 tot +45 °C | 12 kWh |
| 8720169270640 | MAS LEDtube 900mm HE 11.5W 840 T5 EU | -20 tot +45 °C | 12 kWh |
| 8720169270664 | MAS LEDtube 900mm HE 11.5W 865 T5 EU | -20 tot +45 °C | 12 kWh |
| 8720169275218 | MAS LEDtube 600mm HO 10.5W 830 T5 | -20 tot +45 °C | 11 kWh |
| 8720169275317 | MAS LEDtube 600mm HO 10.5W 840 T5 | -20 tot +45 °C | 11 kWh |
| 8720169275232 | MAS LEDtube 600mm HO 10.5W 865 T5 | -20 tot +45 °C | 11 kWh |
| 8720169275256 | MAS LEDtube 900mm HO 18.5W 830 T5 | -20 tot +45 °C | 19 kWh |
| 8720169275270 | MAS LEDtube 900mm HO 18.5W 840 T5 | -20 tot +45 °C | 19 kWh |
| 8720169275294 | MAS LEDtube 900mm HO 18.5W 865 T5 | -20 tot +45 °C | 19 kWh |
| 8720169311695 | MAS LEDtube 600mm HE 7W 830 T5 EU | -20 tot +45 °C | 7 kWh |
| 8720169306820 | MAS LEDtube 600mm HE 7W 840 T5 EU | -20 tot +45 °C | 7 kWh |
| 8720169306844 | MAS LEDtube 600mm HE 7W 865 T5 EU | -20 tot +45 °C | 7 kWh |

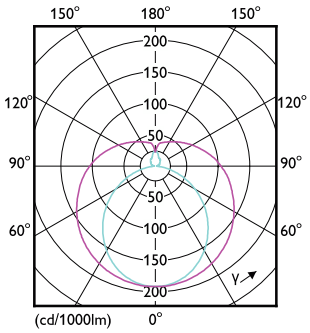


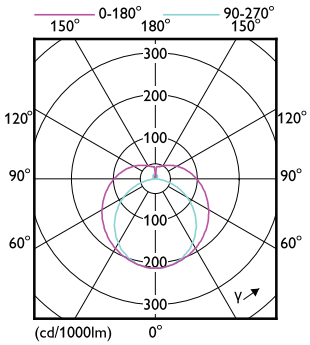


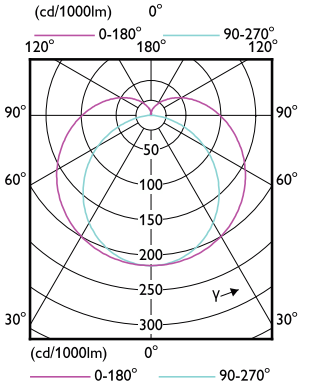

# MASTER LEDtube Mains T5

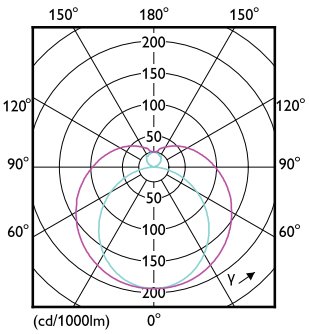


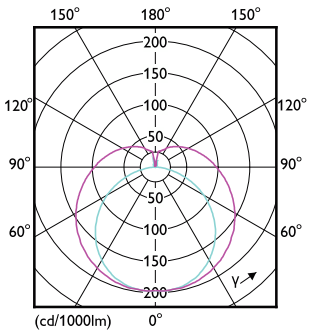


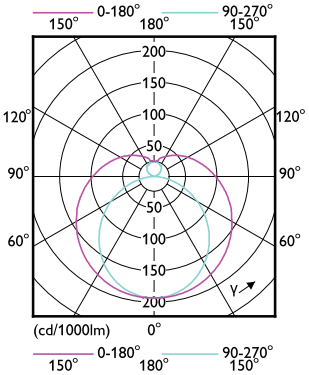


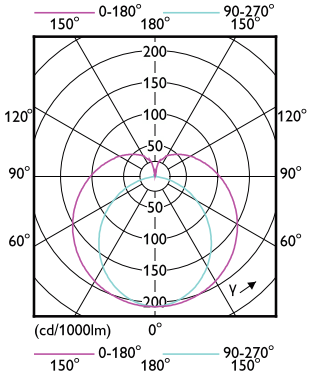


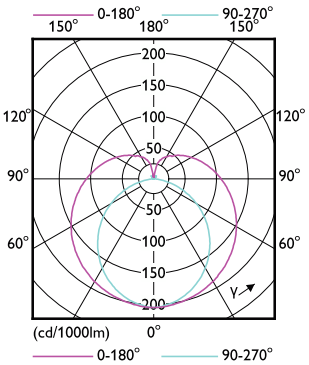


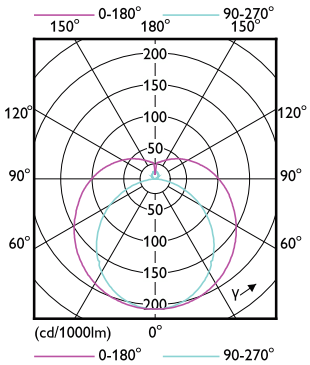


© 2025 Signify Holding Alle rechten voorbehouden. Signify doet geen uitspraken over en geeft geen garanties voor de nauwkeurigheid of volledigheid van de informatie in dit document en kan op geen enkele wijze aansprakelijk worden gesteld voor handelingen die op deze informatie worden gebaseerd. De informatie in dit document is niet bedoeld als offerte en maakt geen deel uit van enige aanbieding of overeenkomst, tenzij anderszins overeengekomen met Signify. Alle handelsmerken en logo's zijn het eigendom van Signify Holding of hun respectieve eigenaren.