xitanium

MasterConnect Sensor

EasyAir SNH212 MC
EasyAir SNHB212 MC

SNH212 MC

SNHB212 MC

Installation instructions

Instructions d'installation
Instrucciones de instalación
Istruzioni per l'installazione
Installatie-instructies
Installationsanweisungen
instrukcja instalacji
Instruções de instalação
οδηγίες εγκατάστασης
إرشادات التركيب

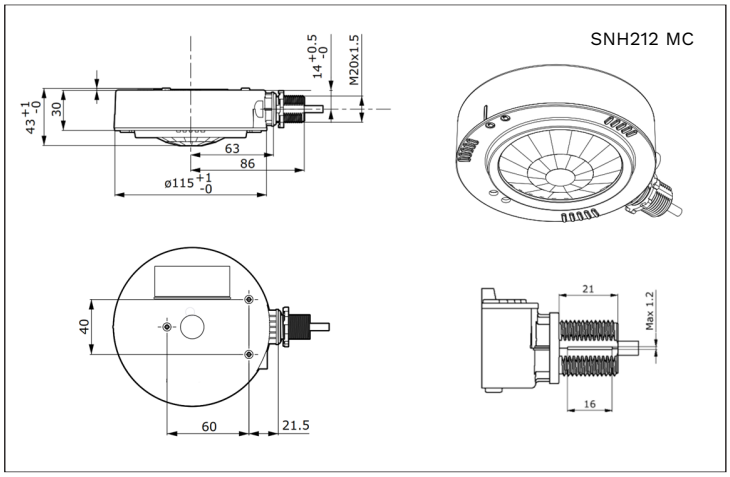

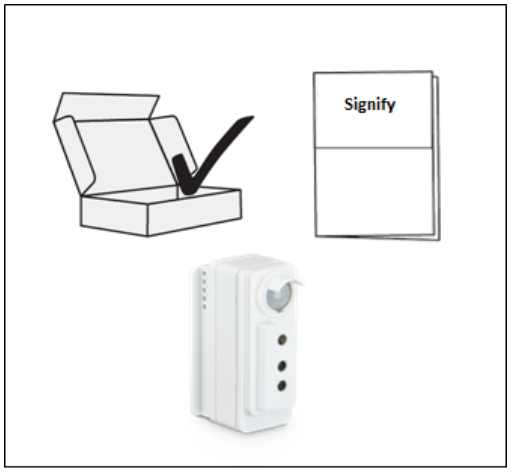

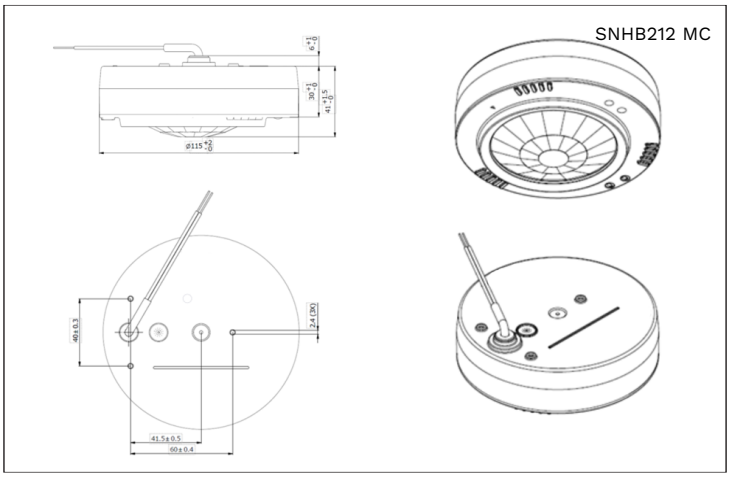

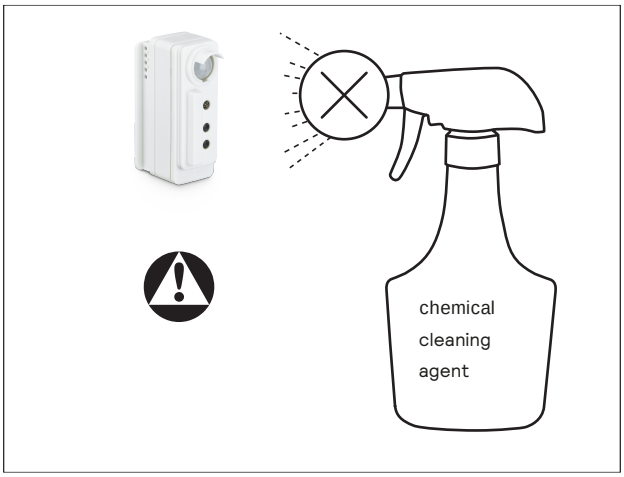

IP20

max 55° C
min 0° C

≤85 %

kg 0.016 kg

zigbee

Works with MasterConnect

442280113542, 02-10-2026

https://www.signify.com/oem

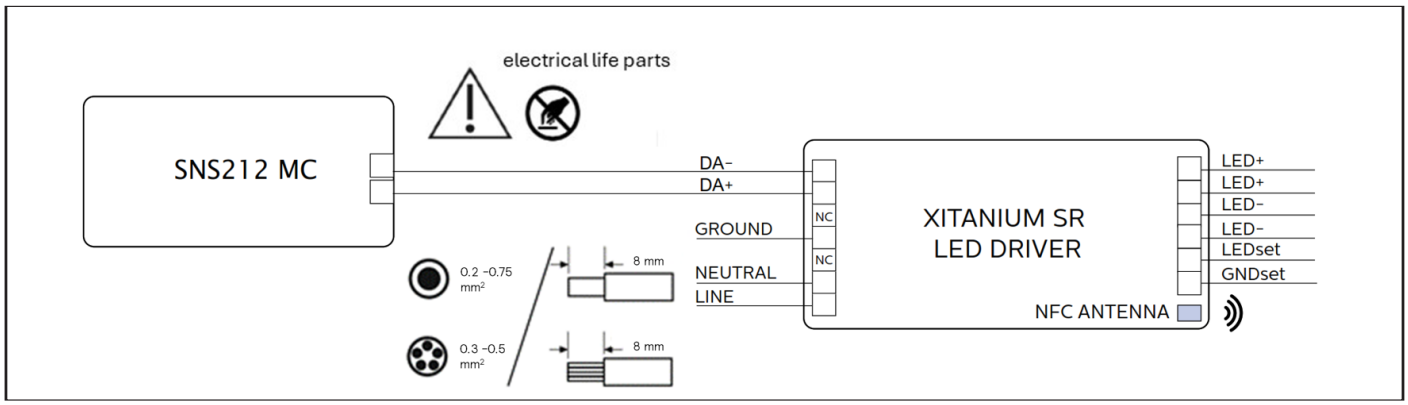

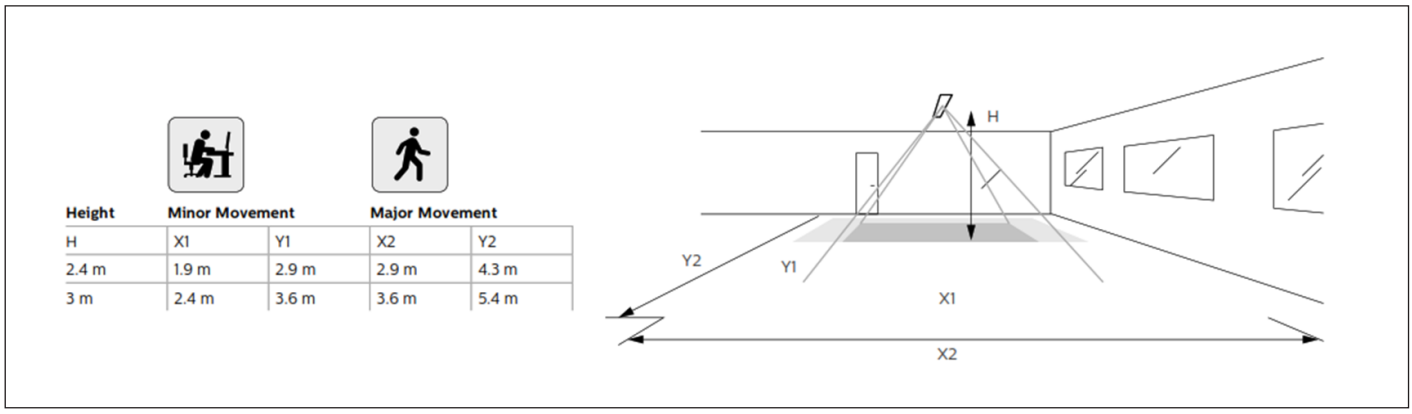

Height	Minor Movement		Major Movement	
H	X1	Y1	X2	Y2
2.4 m	1.9 m	2.9 m	2.9 m	4.3 m
3 m	2.4 m	3.6 m	3.6 m	5.4 m

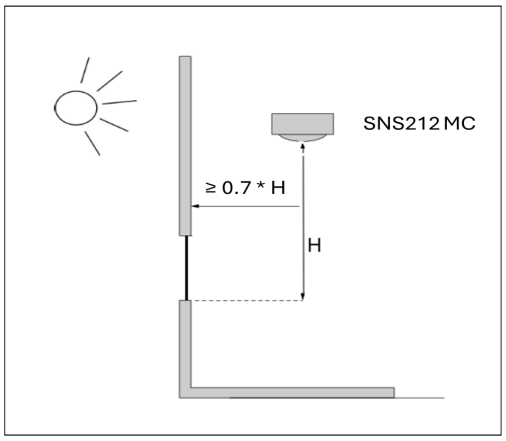

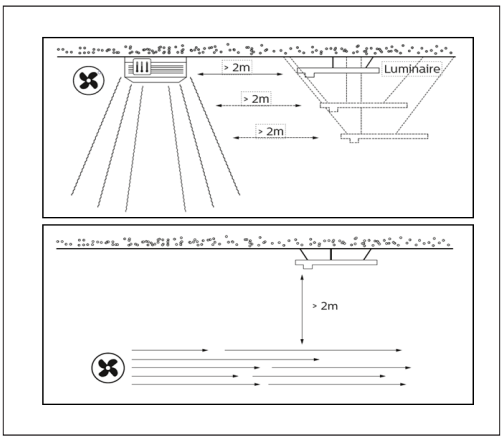

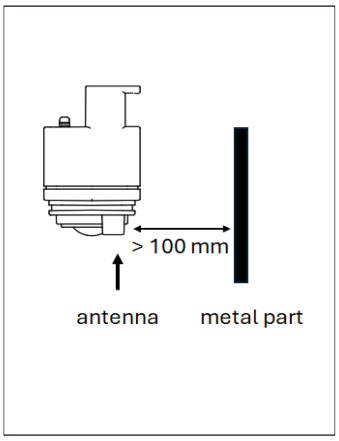

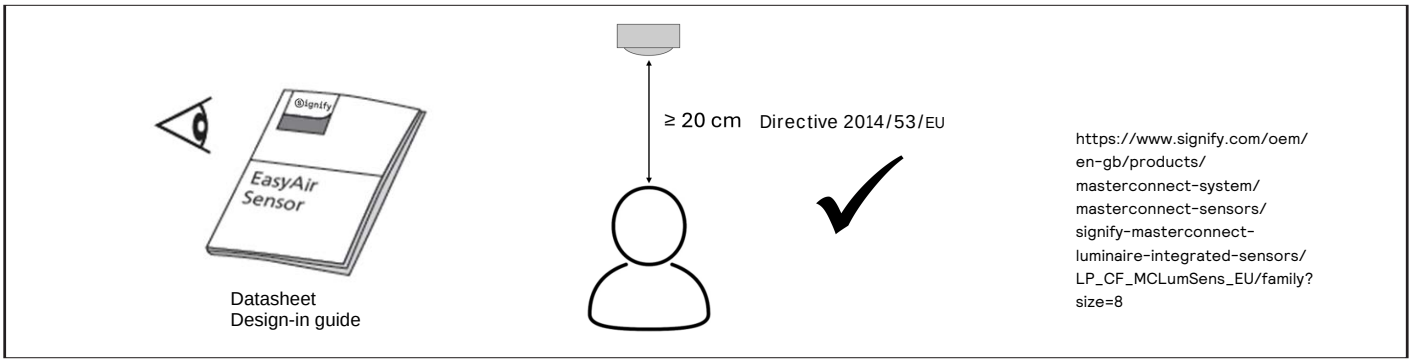

https://www.signify.com/oem/en-gb/products/masterconnect-system/masterconnect-sensors/signify-masterconnect-luminaire-integrated-sensors/LP_CF_MCLumSens_EU/family?size=8

xitanium

© 2026 Signify Holding. All rights reserved. The information provided herein is subject to change, without notice. Signify does not give any representation or warranty as to the accuracy or completeness of the information included herein and shall not be liable for any action in reliance thereon. The information presented in this document is not intended as any commercial offer and does not form part of any quotation or contract, unless otherwise agreed by Signify.All trademarks are owned by Signify Holding or their respective owners.

21
PAP