PHILIPS

Fortimo

LED

Fortimo SLM C 8xx 1211
L22 2828 G8N HE

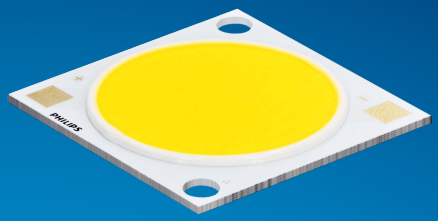

Datasheet

Best combination of quality of light and efficacy with industry standard footprint

Fortimo LED SLM CRI80 G8N HE

Philips continues to develop its tried and trusted high efficiency COB range of products (since 2020) by introducing the third generation Fortimo SLM G8 HE with an expanded offer featuring CRI 80 products. The Fortimo SLM CRI80 G8 HE range boasts an impressive 7% - 12% increase in efficacy and enhanced color consistency of 2 SDCM compared to its predecessor, the Fortimo SLM CRI80 G7. Drawing on our four years of industry and R&D experience with high efficacy COB platforms, we have further optimized the quality of light and enhanced the product's robustness. With the Color Rendering Index extension, Fortimo SLM G8 HE helps unlock the extraordinary potential of light, facilitating innovation and inspiring the next generation of luminaire design for our OEM customers. Check out the online Easy Design-in Tool for your perfect system combination (www.easydesignintool.com).

Key features and benefits

- Most widely used footprint to enable ease of use
- Best quality of light available for all applications
- 7%~12% efficacy improvement vs. current Fortimo SLM CRI80 G7N range
- Excellent color consistency management (2 SDCM)
- System proposition (Module + Driver + Holder)
- Flexibility to optimize luminaire performance (high efficacy or high lm output)
- 50,000 hours lifetime

October 2024









Ordering data

Commercial product name	EOC	12NC	EPREL registration #	Box quantity
Fortimo SLM C 827 1211 L22 2828 G8N HE	8720169 383203 00	9290 039 06780	2093654	10
Fortimo SLM C 830 1211 L22 2828 G8N HE	8720169 383234 00	9290 039 06880	2093795	10
Fortimo SLM C 835 1211 L22 2828 G8N HE	8720169 383265 00	9290 039 06980	2093650	10
Fortimo SLM C 840 1211 L22 2828 G8N HE	8720169 383296 00	9290 039 07080	2093638	10
Fortimo SLM C 850 1211 L22 2828 G8N HE	8720169 383326 00	9290 039 07180	2093798	10
Fortimo SLM C 830 PW 1211 L22 2828 G8N HE	8720169 383357 00	9290 039 07280	2093813	10

Not all products are globally available by default.
Please contact your local sales representative for local availability and activation conditions.

Drive currents

Parameter	Nominal*	Life**	Max***	Unit
Fortimo SLM C 8xx 1211 L22 2828 G8N HE	990	1980	1980	mA

Module temperatures

Parameter	Nominal*	Life**	Max***	Unit
T_c (case temperature at T_c point)	65	95	95	°C

* Nominal value at which typical performance is specified

** Value at which life time is specified

*** Maximum value for safe operation, do not operate above this value

Optical characteristics - table per color (CCT)

Fortimo SLM C 827 1211 L22 2828 G8N HE

Parameter	Min	Typ	Max	Unit
Luminous flux	5600	5895	6484	lm
Efficacy		171		lm/W
Correlated color temperature (CCT)		2700		K
Color coordinates (CIEx, CIEy)		(0.458, 0.410)		-
Color consistency			2	SDCM
CRI	80			
R9	>0			
Photometric code		827/259		
Photobiological safety		RG1 unlimited		

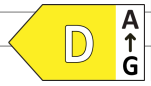

Measurement precision ± 5% for the flux data and ± 6% for the efficacy data. Measurement precision for color coordinates ± 0.005. Measurement precision for CRI ± 1.5.

Operation point	827	lm	lm/W
80% I-nom 792mA	Tc 25 °C	5021	185
	Tc-nom 65 °C	4779	178
	Tc-max 95 °C	4542	171
I-nom 990mA	Tc 25 °C	6196	179
	Tc-nom 65 °C	5895	171
	Tc-max 95 °C	5601	165
I-max 1980mA	Tc 25 °C	11725	154
	Tc-nom 65 °C	11127	148
	Tc-max 95 °C	10541	141

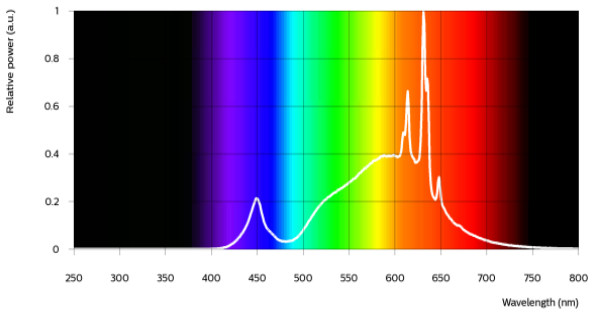

Fortimo SLM C 830 1211 L22 2828 G8N HE

Parameter	Min	Typ	Max	Unit
Luminous flux	5743	6045	6650	lm
Efficacy		176		lm/W
Correlated color temperature (CCT)		3000		K
Color coordinates (CIEx, CIEy)		(0.434, 0.403)		-
Color consistency			2	SDCM
CRI	80			
R9	>0			
Photometric code		830/259		
Photobiological safety		RG1 unlimited		



Measurement precision ± 5% for the flux data and ± 6% for the efficacy data. Measurement precision for color coordinates ± 0.005. Measurement precision for CRI ± 1.5.

Operation point	830	lm	lm/W
80% I-nom 792mA	Tc 25 °C	5148	189
	Tc-nom 65 °C	4900	182
	Tc-max 95 °C	4658	175
I-nom 990mA	Tc 25 °C	6353	183
	Tc-nom 65 °C	6045	176
	Tc-max 95 °C	5743	169
I-max 1980mA	Tc 25 °C	12024	158
	Tc-nom 65 °C	11411	152
	Tc-max 95 °C	10811	145

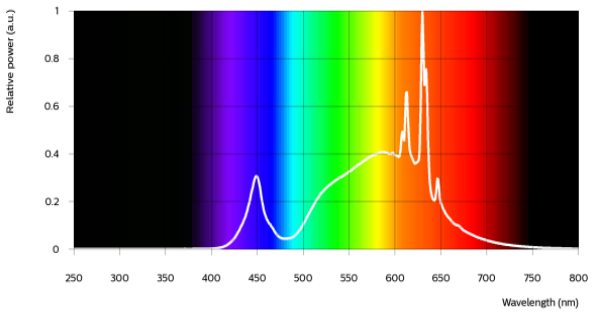

Fortimo SLM C 835 1211 L22 2828 G8N HE

Parameter	Min	Typ	Max	Unit
Luminous flux	5880	6190	6809	lm
Efficacy		180		lm/W
Correlated color temperature (CCT)		3500		K
Color coordinates (CIEx, CIEy)		(0.408, 0.393)		-
Color consistency			2	SDCM
CRI	80			
R9	>0			
Photometric code		835/259		
Photobiological safety		RG1 unlimited		

Measurement precision ± 5% for the flux data and ± 6% for the efficacy data. Measurement precision for color coordinates ± 0.005. Measurement precision for CRI ± 1.5.

Operation point	835	lm	lm/W
80% I-nom 792mA	Tc 25 °C	5271	194
	Tc-nom 65 °C	5018	187
	Tc-max 95 °C	4770	179
I-nom 990mA	Tc 25 °C	6506	187
	Tc-nom 65 °C	6190	180
	Tc-max 95 °C	5881	173
I-max 1980mA	Tc 25 °C	12313	162
	Tc-nom 65 °C	11687	155
	Tc-max 95 °C	11073	148

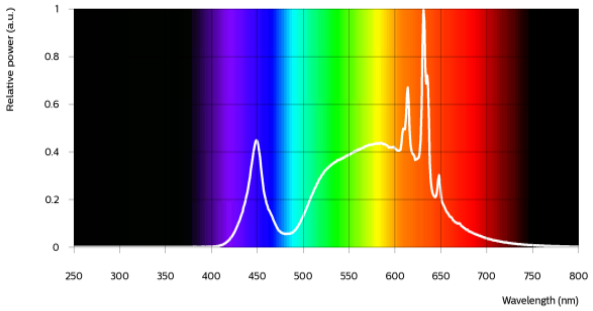

Fortimo SLM C 840 1211 L22 2828 G8N HE

Parameter	Min	Typ	Max	Unit
Luminous flux	5909	6220	6842	lm
Efficacy		181		lm/W
Correlated color temperature (CCT)		4000		K
Color coordinates (CIEx, CIEy)		(0.382, 0.380)		-
Color consistency			2	SDCM
CRI	80			
R9	>0			
Photometric code		840/259		
Photobiological safety		RG1 unlimited		

Measurement precision ± 5% for the flux data and ± 6% for the efficacy data. Measurement precision for color coordinates ± 0.005. Measurement precision for CRI ± 1.5.

Operation point	840	lm	lm/W
80% I-nom 792mA	Tc 25 °C	5297	195
	Tc-nom 65 °C	5042	187
	Tc-max 95 °C	4793	180
I-nom 990mA	Tc 25 °C	6537	188
	Tc-nom 65 °C	6220	181
	Tc-max 95 °C	5910	174
I-max 1980mA	Tc 25 °C	12373	162
	Tc-nom 65 °C	11744	156
	Tc-max 95 °C	11128	149

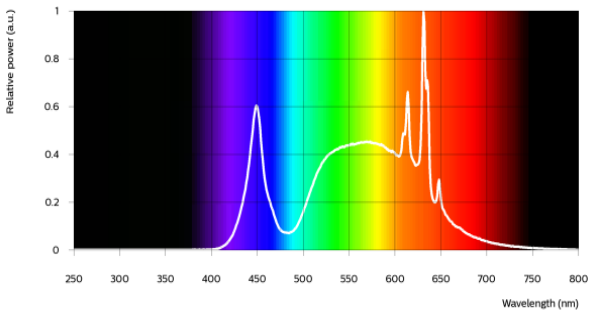

Fortimo SLM C 850 1211 L22 2828 G8N HE

Parameter	Min	Typ	Max	Unit
Luminous flux	5914	6225	6848	lm
Efficacy		181		lm/W
Correlated color temperature (CCT)		5000		K
Color coordinates (CIEx, CIEy)		(0.345, 0.355)		-
Color consistency			2	SDCM
CRI	80			
R9	>0			
Photometric code		850/259		
Photobiological safety		RG1 unlimited		

Measurement precision ± 5% for the flux data and ± 6% for the efficacy data. Measurement precision for color coordinates ± 0.005. Measurement precision for CRI ± 1.5.

Operation point	850	lm	lm/W
80% I-nom 792mA	Tc 25 °C	5300	195
	Tc-nom 65 °C	5046	188
	Tc-max 95 °C	4797	180
I-nom 990mA	Tc 25 °C	6542	189
	Tc-nom 65 °C	6225	181
	Tc-max 95 °C	5915	174
I-max 1980mA	Tc 25 °C	12385	163
	Tc-nom 65 °C	11757	156
	Tc-max 95 °C	11141	149

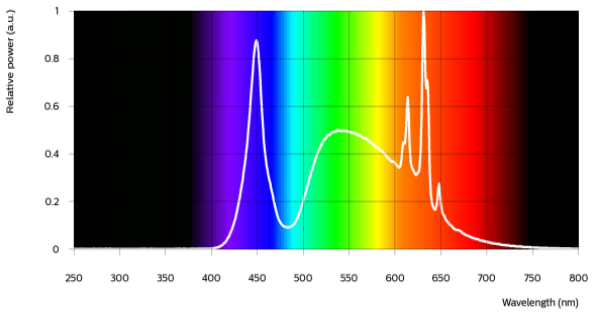

Fortimo SLM C 830 PW 1211 L22 2828 G8N HE

Parameter	Min	Typ	Max	Unit
Luminous flux	5662	5960	6556	lm
Efficacy		173		lm/W
Correlated color temperature (CCT)		3000		K
Color coordinates (CIEx, CIEy)		(0.422, 0.386)		-
Color consistency			2	SDCM
CRI	80			
R9	>0			
Photometric code		830/259		
Photobiological safety		RG1 unlimited		

Measurement precision ± 5% for the flux data and ± 6% for the efficacy data. Measurement precision for color coordinates ± 0.005. Measurement precision for CRI ± 1.5.

Operation point	830	lm	lm/W
80% I-nom 792mA	Tc 25 °C	5076	187
	Tc-nom 65 °C	4831	180
	Tc-max 95 °C	4592	173
I-nom 990mA	Tc 25 °C	6264	181
	Tc-nom 65 °C	5960	173
	Tc-max 95 °C	5663	167
I-max 1980mA	Tc 25 °C	11855	156
	Tc-nom 65 °C	11252	149
	Tc-max 95 °C	10660	143

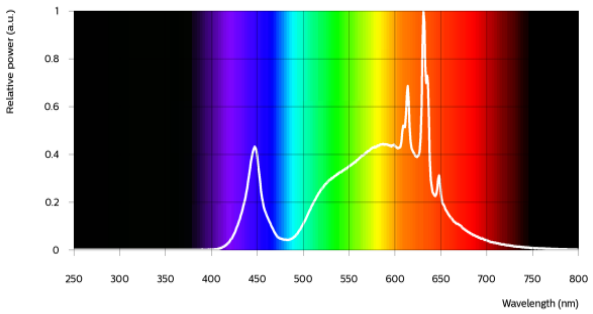

Beam shape

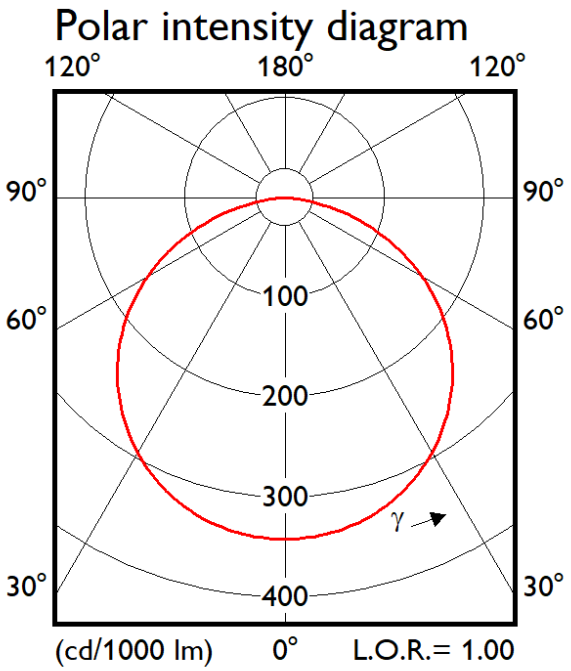
Polar intensity diagram
120°
180°
120°
90°
90°
60°
60°
100
200
300
γ
30°
30°
400
(cd/1000 lm)
0°
L.O.R.= 1.00

Electrical characteristics

Parameter	Min	Typ	Max	Unit
Forward voltage	32.5	34.7	37.0	V
Power consumption	32.2	34.4	36.6	W = kWh/1000h
Number of modules in series per chain			1	
Number of modules per chain			1	
Number of modules in parallel			1	

Measurement precision for Vf +/- 3%. Measurement precision for power +/- 3.3%

Tuning information

Flux and efficacy versus current (at Tc nominal)

I [mA]	Flux [%]	Efficacy [%]
1980	189	86
1485	146	92
990	100	100
792	81	103
495	52	109

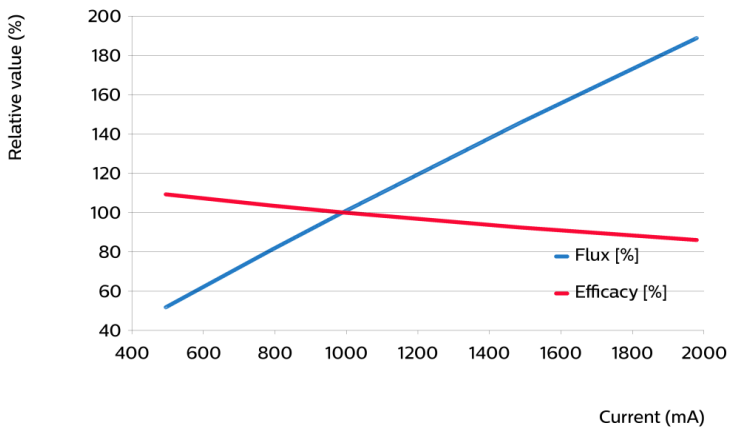

Flux and efficacy versus temperature at Tc (at I nominal)

Tc [°C]	Flux [%]	Efficacy [%]
95	95	96
65	100	100
25	105	104
0	108	105

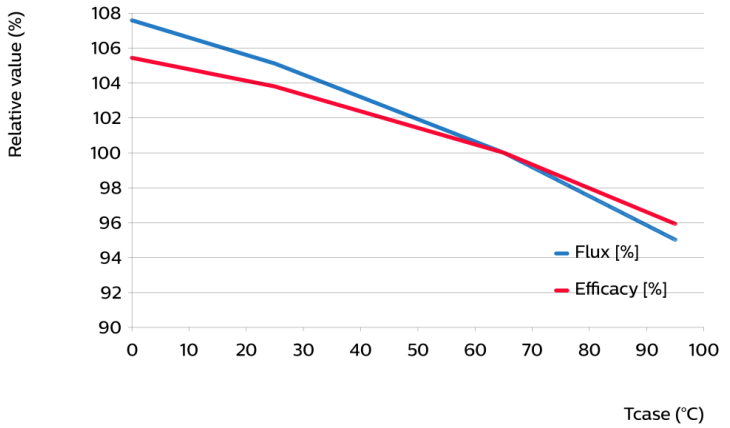

Lumen maintenance

Operation point	Lumen maintenance x 1000 hours	L70			L80			L90		
		B50	B20	B10	B50	B20	B10	B50	B20	B10
80% I-nom 792mA	Tc 50°C	>66	>66	>66	>66	>66	>66	>66	>66	>66
	Tc 65°C	>66	>66	>66	>66	>66	>66	>66	>66	>66
	Tc 95°C	>66	>66	>66	>66	>66	>66	>66	>66	>66
I-nom 990mA	Tc 50°C	>66	>66	>66	>66	>66	>66	>66	>66	>66
	Tc 65°C	>66	>66	>66	>66	>66	>66	>66	>66	>66
	Tc 95°C	>66	>66	>66	>66	>66	>66	>66	>66	62
I-max 1980mA	Tc 50°C	>66	>66	>66	>66	>66	>66	50	42	39
	Tc 65°C	>66	>66	>66	>66	>66	62	38	32	29
	Tc 95°C	>66	>66	60	49	41	38	23	19	17

Lifetime

Parameter	Value	Unit
M70F50 nominal	>66000	hours

Performance Window

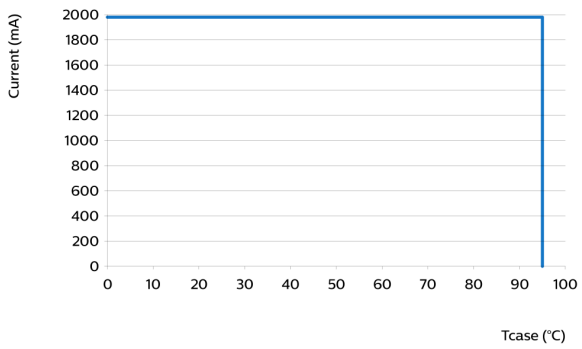

Mechanical characteristics

Parameter	Min	Typ	Max	Unit
Length	27.75	28	28.25	mm
Width	27.75	28	28.25	mm
Height	0.8	0.9	1	mm
Height	1.3	1.6	1.9	mm
Product mass		2.19		gram

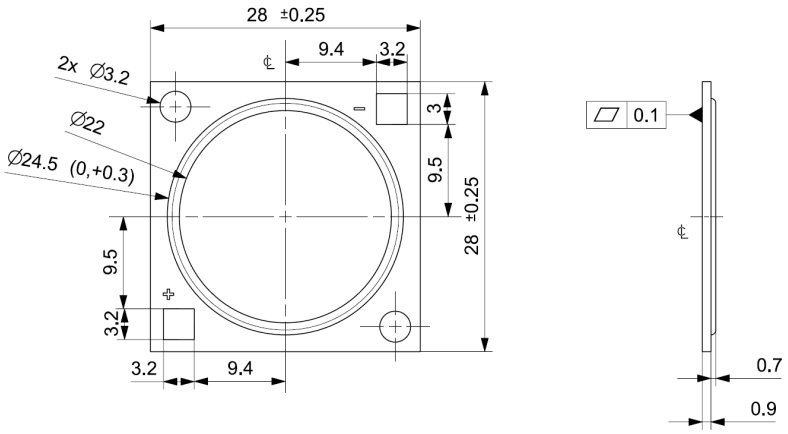

Absolute ratings

Parameter	Min	Max	Unit
Current through the LED module (I-max)		1980	mA
Case temperature (Tc-max)		95	°C
ESD (direct contact)	8		kV
Working voltage		60	V_{dc}
Ambient temperature	-20	40	°C
Storage temperature	-40	80	°C

At illumination levels exceeding 1342 lux risk group classification may be RG2.

Application information

Certificates and Standards
CB
CE
ENEC
ENEC+
EPRS 001
IEC 62031
UKCA
UL
UL 8750

Environmental
RoHS/REACH

Application	
Dimming	Yes



© 2024 Signify Holding, IBRS 10461, 5600VB, NL. All rights reserved. The information provided herein is subject to change, without notice. Signify does not give any representation or warranty as to the accuracy or completeness of the information included herein and shall not be liable for any action in reliance thereon. The information presented in this document is not intended as any commercial offer and does not form part of any quotation or contract, unless otherwise agreed by Signify.

Philips and the Philips Shield Emblem are registered trademarks of Koninklijke Philips N.V. All other trademarks are owned by Signify Holding or their respective owners.
UK importer address: Signify Commercial UK Limited, 3 Guildford Business Park, GU2 8XG

11/10/2024

www.philips.com/oem