Essential Smartbright Projector
ST033T G3 LED軌道燈
Mounting Instruction/安裝說明書

IEC 60598 | R3A588 RoHS | 110V-240V | 50Hz 60Hz | t_a25°C | IP20 | 室內用

Product Type 產品型號	Watt 瓦數	Lumen Output 光通量	CCT 色溫	CRI 顯色指數	Beam Angle 光束角度	Housing Color 燈體顏色	kg
ST033T G3 LED6/930 7W WV WB WH	7W	630lm	3000K	90	36°	White/白色	0.228
ST033T G3 LED6/930 7W WV WB BK		595lm				Black/黑色	
ST033T G3 LED7/940 7W WV WB WH		700lm	4000K			White/白色	
ST033T G3 LED7/940 7W WV WB BK		665lm				Black/黑色	
ST033T G3 LED9/930 10W WV MB WH	10W	900lm	3000K		24°	White/白色	0.228
ST033T G3 LED9/930 10W WV MB BK		850lm				Black/黑色	
ST033T G3 LED10/940 10W WV MB WH		1000lm	4000K			White/白色	
ST033T G3 LED10/940 10W WV MB BK		950lm				Black/黑色	
ST033T G3 LED9/930 10W WV WB WH		900lm	3000K		36°	White/白色	
ST033T G3 LED9/930 10W WV WB BK		850lm				Black/黑色	
ST033T G3 LED10/940 10W WV WB WH		1000lm	4000K			White/白色	
ST033T G3 LED10/940 10W WV WB BK		950lm				Black/黑色	
ST033T G3 LED18/930 20W WV MB WH	20W	1800lm	3000K		24°	White/白色	0.361
ST033T G3 LED17/930 20W WV MB BK		1700lm				Black/黑色	
ST033T G3 LED20/940 20W WV MB WH		2000lm	4000K			White/白色	
ST033T G3 LED19/940 20W WV MB BK		1900lm				Black/黑色	
ST033T G3 LED18/930 20W WV WB WH		1800lm	3000K		36°	White/白色	
ST033T G3 LED17/930 20W WV WB BK		1700lm				Black/黑色	
ST033T G3 LED20/940 20W WV WB WH		2000lm	4000K			White/白色	
ST033T G3 LED19/940 20W WV WB BK		1900lm				Black/黑色	
ST033T G3 LED27/930 30W WV MB WH	30W	2700lm	3000K		24°	White/白色	0.439
ST033T G3 LED26/930 30W WV MB BK		2550lm				Black/黑色	
ST033T G3 LED30/940 30W WV MB WH		3000lm	4000K			White/白色	
ST033T G3 LED29/940 30W WV MB BK		2850lm				Black/黑色	
ST033T G3 LED27/930 30W WV WB WH		2700lm	3000K		36°	White/白色	
ST033T G3 LED26/930 30W WV WB BK		2550lm				Black/黑色	
ST033T G3 LED30/940 30W WV WB WH		3000lm	4000K			White/白色	
ST033T G3 LED29/940 30W WV WB BK		2850lm				Black/黑色	

Product lifespan refers to the lighting time when the luminous flux of 50% lamps in a batch of the same lamps reaches 70% of the initial luminous flux(L70B50). The estimated product lifespan is based on the indoor ambient temperature of 25 ˚C. good aircirculation and working at rated voltage.

產品壽命是指在一批相同的燈具中有50%的燈具的光通量達到初始光通量70%時所用的點燈時間(L70B50)。產品的壽命估計是基於室內環境溫度25攝氏度，空氣流通良好並在額定電壓下工作。

Size of the Light /燈具尺寸

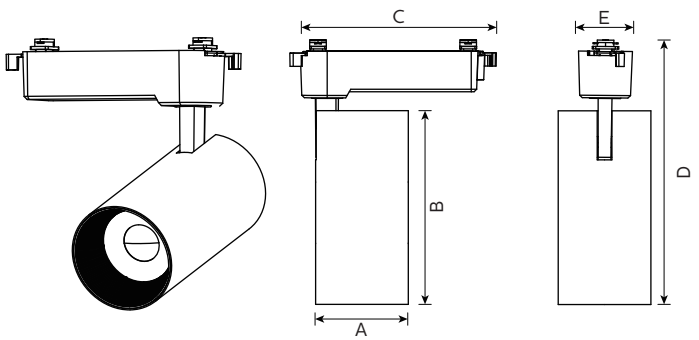

Unit:mm

Size	7W	10W	20W	30W
A	Φ49	Φ49	Φ65	Φ76
B	118	118	138	158
C	127	127	168	168
D	175	175	194	216
E	36	36	44	44

委製商/進口商：台灣昕諾飛股份有限公司
地址：台北市南港區忠孝東路七段508號2樓之一
原產地：荷蘭昕諾飛授權於中國製造
服務電話：0800-808268

Manufacturer:
Signify Luminaires(Shanghai)Co.,Ltd.
2F,Building1, No.2555, Hechuan Road,
Minhang District 200233,
Shanghai China
Service hotline : 8008 201 201
4009 201 201

PHILIPS
Philips and the Philips shield emblem are registered trademarks of Koninklijke Philips N.V

Rotation angle of the light/ 燈具可旋轉角度

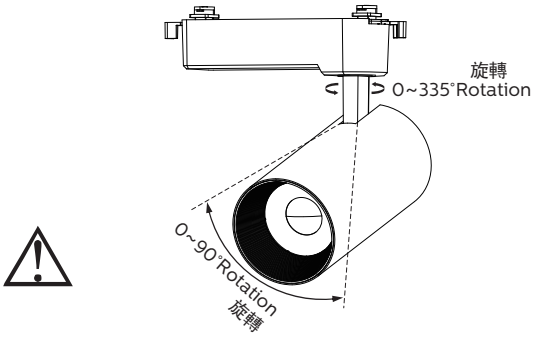

Only adjust the lighting angle when the powerisof./
請在未通電時調節燈具照射角度。
Please be careful when adjusting the angle, and please stop rotate in the same direction When the lamp cap is adjusted to the stop position./
調節角度時請小心操作，當燈頭調節到停止位時，切勿同方向繼續旋轉。

Recommended Installation Method/推薦安裝方式

Track Top Suction Installation/
軌道吸頂安裝

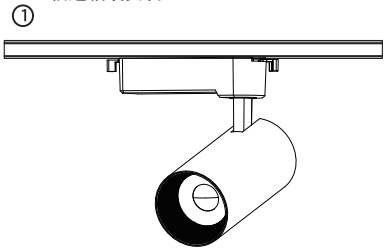

Track Embedded Installation/
軌道嵌入式安裝

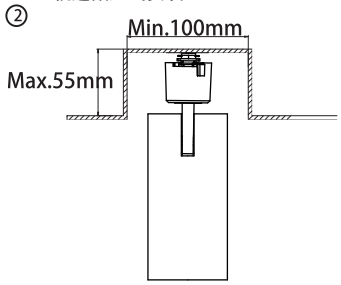

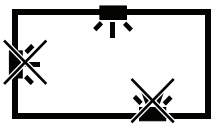

We recommended install the track on the ceiling.It is prohibited to install the track on the side wall and the ground.
建議軌道安裝於天花板上，禁止安裝於側牆以及地面。

Light Installation/燈具安裝

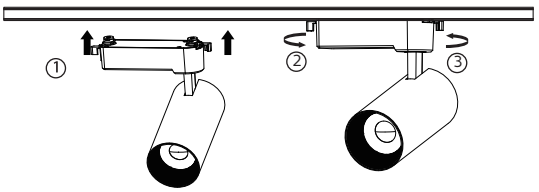

Put the track joint into the track, and rotate the track head clip past the clamping point to ensure that the conductor is in full contact.
將軌道接頭裝入軌道內，旋轉軌道頭卡扣過卡點，確保導體充分接觸。

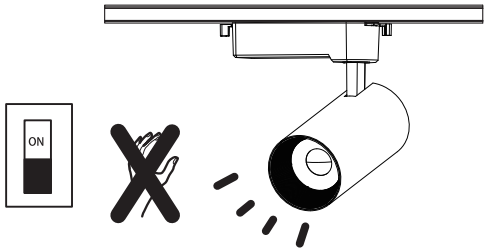

Please do not contact the lamp cap directly with your hand to adjust when the light is lit .
燈具點亮時請不要用手直接接觸燈頭進行調節。

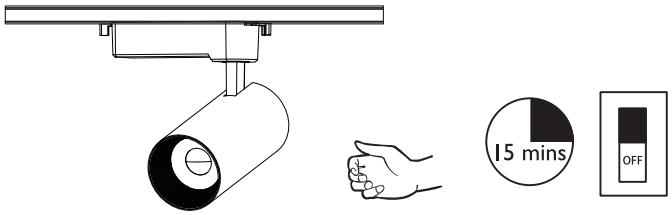

After turning off the power and standing for 15 minutes, the lamp holder can be directly touched by hand to adjust.
關閉電源並靜置15分鐘後，可以用手直接接觸燈頭進行調節。

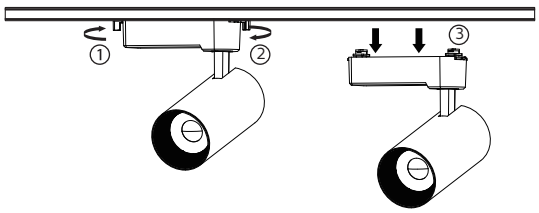

Rotate the track head clip to the other end of the clip point and tilt the lamp according to the drawing until the track is pulled out.
將軌道頭卡扣旋轉至卡點的另一端，依據圖示傾斜燈具，直至拔出軌道。

Product Model / 產品名稱	Watt / 瓦數 (W)	Operating Current / 工作電流 (A)(@110V)	Inrush Current / 浪湧電流 (A)	Duration of Inrush Current / 浪湧電流持續時間 T(@50% of Ipeak)(μs)	The Leakage Current / 漏電流 (mA)	Maximum Number of Lamps Connected (PCS) of 16A type B MCB/16A B型微型斷路器最多可接燈具數 (pcs)	Maximum Number of Lamps Connected (PCS) of 16A type C MCB/16A C型微型斷路器最多可接燈具數 (pcs)
ST033T G3	7	0.070	11	144	0.06	120	201
ST033T G3	10	0.103	11.4	152	0.93	82	138
ST033T G3	20	0.201	23	180	0.04	39	67
ST033T G3	30	0.305	23.6	160	0.22	38	65

The leakage current (contact current or protective conductor current) of the circuit depends greatly on the conductor,such as the length of the conductor specification. In the field,the connection of the power cord to the lamp, and the arrangement of the power cord of the lamp also have an effect.
*In some cases it is also referred to as the ground drain current.
電路的漏電流*(接觸電流或保護導體電流)很大程度取決於導線，如導線的規格長度。在現場使用時，電源線到燈具的接法，燈具電源線的排布也有影響。
*在有些場合也稱作對地漏電流。

01. Luminaires shall be installed by qualified electricians and wiring shall comply with IEC-60364-7-714 Standard.
02. Please be sure to cut off the power before operation.
03. Do not continue to use if the luminaire is damaged.
04. Luminaires should not be stored and used in corrosive environments or in environments containing hazardous substances such as sulfide, halides, phthalates, etc.
05. Luminaires should be installed outside the reach of human hands.
Warning The light source and parts of this lamp are not replaceable.
06. When the light source and parts reach the end of their life, the whole lamp should be replaced.
01.燈具應由有資格的電工安裝，接線應符合IEC-60364-7-714標準或國家標準。
02.操作前請務必切斷電源。
03.若燈具破損，請勿繼續使用。
04.燈具避免在腐蝕性環境或者含有有害物質，例如硫化物，滷化物，鄰苯二甲酸酯等環境中存儲和使用。
05.燈具安裝在人手可觸及範圍外。
警告:此燈具的光源和零部件是不可替換的;
06.當光源和零部件到其壽終時，應替換整個燈具!
限用物質含有情況標示咨詢請參考昕諾飛網址http://www. smart-lighting.com.tw/ROHS
說明:請點選頁面中[支援]清單下之[ROHS咨詢]標籤