PHILIPS

Sensors

EasySense

SNS21x MC, SNS41x MC



Design-in Guide

Single, compact, **cost-effective luminaire control**

Philips EasySense SNS21x, **SNS41x** MC Family

Contents

Introduction

Warnings and instructions

EasySense SNS21x, SNS41x MC Family Introduction

Product characteristics
EasySense SNS21x, SNS41x MC Family overview
Zigbee and Bluetooth Low Energy
Motion detector
Sensor view shield
Light sensor
LED indicator

Mechanical design-in
Wire strip length
Wire insertion
Wire separation from the connector
Wiring Information
Wire distance for remote mounting
Luminaire-to-luminaire distance
Recommendations to design-in a luminaire around EasySense with good RF signal
Mounting to a luminaire
Mounting in a bracket (SMB-50)
Installing EasySense SNS21x MC with ceiling mount bracket

Installer Label Instructions

EasySense SNS21x MC with multiple Philips Xitanium SR LED drivers (1:N application)

Luminaire Production Test

FAQ

Contact details

Disclaimer

Introduction

This design-in guide is applicable to the EasySense SNS 21x and 41x MC family of products, which work with the Philips MasterConnect App. For specific product features, refer to the applicable datasheet. In this guide, luminaire manufacturers will find the information required to design this product into a luminaire and configure it to suit specific applications. This design-in guide covers sensor functionality, mechanical mounting, wiring details, configuration and commissioning (grouping) method, application notes, and frequently asked questions.

More information or support

Product datasheets and other applicable documents can be found on the Philips MasterConnect website:

https://www.usa.lighting.philips.com/products/lighting-components/masterconnect

For further information or support, please consult your local Signify sales representative.



Philips EasySense SNS21X MC



Philips EasySense SNS41X MC

Warnings and instructions

- The EasySense SNS21x, SNS41x MC Family of products must be used with Philips Xitanium SR LED Drivers.
- Do not apply mains power directly to the sensor.
- Do not cover the sensor during operation or mount the sensor internal to the luminaire.
- External infrared light source in the space might have influence on occupancy detection.
- Incorrect location of sensor (e.g., obstructions in viewing angle) will result in incorrect functioning of occupancy detection.
- Faulty settings of the sensor might result in undefined startup.
- Make sure the sensor, especially the occupancy detection lens, is protected from damage during shipment and handling.
- EasySense SNS21x, SNS41x MC devices are designed for a typical indoor environment (open/private offices, conference rooms, classrooms, corridors, etc.) in normally heated and ventilated areas. These devices have no protection against aggressive chemicals or water.
- Make sure the the EasySense SNS21x, SNS41x MC Zigbee/ Bluetooth antenna is not covered by metal for proper RF communication.

EasySense SNS21x, SNS41x MC Family Introduction

The Philips EasySense SNS21x MC Family of products are the ideal solution for per-luminaire control of smart luminaires. They combine occupancy sensing, daylight harvesting and task tuning in a single, compact package for easy OEM luminaire assembly. EasySense SNS21x MC operates with the established Xitanium SR LED driver standard to make a simple two-wire connection between sensor and driver, thus eliminating the need for multiple components and auxiliary devices. The result is a cost-effective and easy-to-design-in solution ideal for energy-savings. An intuitive MasterConnect app makes commissioning and configuration during and after installation fast and easy.

EasySense SNS21x MC enables grouping which allows scene setting on a wireless switch (e.g., presentation mode for a conference room) as well as occupancy sharing (i.e., luminaires within a group can be programmed to remain at prescribed light levels so long as occupancy is detected anywhere in the group).

EasySense SNS41x MC converts a luminaire to a wireless luminaire without the built-in occupancy and daylight sensing functionalities of SNS21x MC. Luminaires with SNS41x MC can be grouped and controlled by centrally placed wireless sensors (eg. OCCDLBP MC) or compatible wireless switches. For the remainder of this guide, all of the guidelines, except for those related to sensing functionalities, also apply to the SNS41x MC devices.

For more details on specification and ordering codes, please refer to the applicable datasheets on the technical downloads page.



EasySense SNS21x MC



EasySense SNS41x MC

Product characteristics

EasySense SNS21x MC Family overview

EasySense SNS21x MC contains multiple functions in one housing and uses two wires to connect with an SR driver. (See wiring diagram in the Mechanical design-in section.) Functions include:

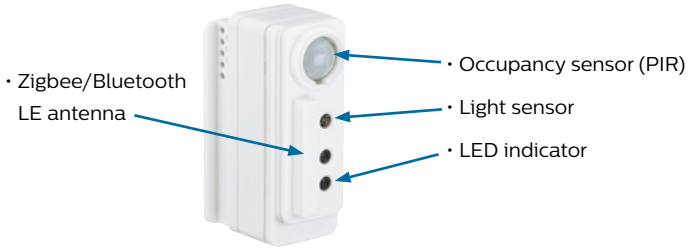

EasySense SNS21x MC is designed for a typical indoor environment (open/private offices, conference rooms, classrooms, corridors, etc.) in normally heated and ventilated areas. The sensor is normally mounted to a luminaire and is optimized for a sensor mounting height of 2.5 m to 3 m.

Zigbee and Bluetooth Low Energy (BLE)

The Zigbee-BLE antenna should not be covered by metal and should be exposed to free air to ensure there is sufficient range.

For more information on mechanical design in of the sensor, please refer the section on page 11.

Product characteristics (continued)

Motion detector

The occupancy sensor is a PIR (Passive Infrared) sensor that detects movement with an X-Y cross-area under an angle of X = 62° and Y = 84°. Two types of movements are defined as follows:

- **Major movement:** movement of a person walking into or through an area.
- **Minor movement:** movement of a person sitting at an office desk reaching for a telephone, turning the pages in a book, opening a file folder, picking up a coffee cup, etc.

When installed in a typical office ceiling at height, the sensor is sensitive to minor movements within X1 by Y1 area. It will respond to minor movements down to a few centimeters at the task area of a desk and is sensitive to major movements within a range of X2 by Y2. The directions X1, X2 are parallel to direction X; likewise for Y1, Y2 being parallel to Y. The maximum recommended height to place the sensor in the ceiling is 3 m to assure movement coverage and detection. The PIR sensor reacts on movement by means of a temperature difference, such as the human body temperature versus its surrounding temperature e.g. people. People sitting behind a transparent shield or glass window are not seen by PIR sensor of SNS210. Please refer to the table below for coverage area details.

	Minor movement		Major movement	
Height	X1	Y1	X2	Y2
2.4m	1.9	2.9	2.9	4.3
3.0m	2.4	3.6	3.6	5.4

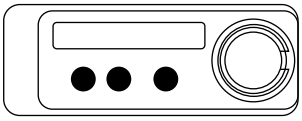

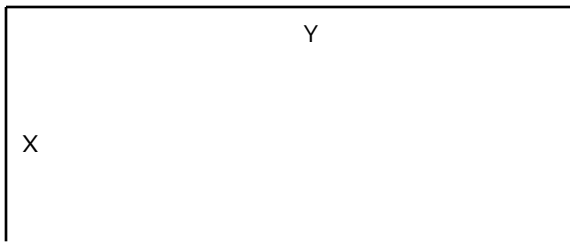

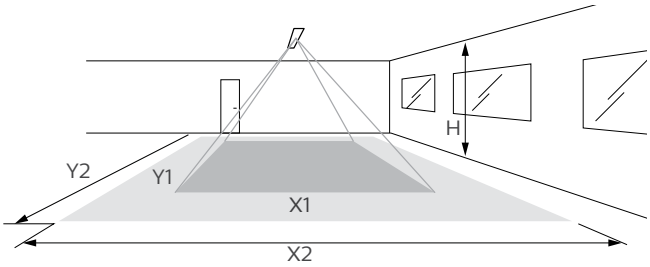

Figure 1. Motion detection area. H: ceiling height. Minor movement detection area: X1 by Y1. Major movement detection area: X2 by Y2.

To prevent false triggers, the EasySense SNS21x MC must be mounted more than 2 m away from air vents in all directions, see figures below:

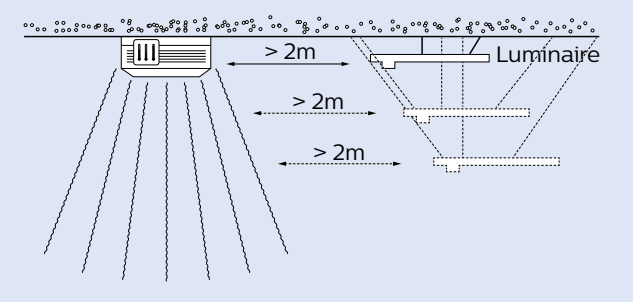

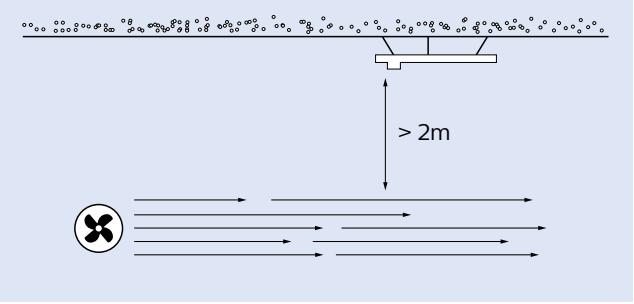

Product characteristics (continued)

Sensor view shield

The sensor comes with an occupancy view shield that can be used to block the movement detection by the sensor in a certain area. The shield comes inverted. (See Figure 2.) This view shield can be pulled out, flipped and inserted back in the sensor and then rotated so the correct area is shielded off from the detection area. If such shield is not needed in the application, it can be easily pulled out from the sensor or left as in the original position.



Figure 2. Sensor view shield.

Light sensor

The light sensor is a photo diode that reads the average light level captured under an angle of approximately 40°. This level depends on the amount of artificial and/or natural light supplied in the office, as well as how this light is reflected toward the ceiling/ sensor. The EasySense SNS21x MC converts the illuminance signal into ON/OFF or dimming commands to the Philips Xitanium SR LED driver in order to maintain a constant light level on the desk.

The sensor should be installed with a minimum distance of 0.6 m to the window to avoid the sensor looking outside. When the sensor is mounted too close to the window it will look partly outside. Sun reflection from cars or snow can reflect directly into the sensor. The sensor will then measure such high illumination levels that it will drive the artificial light to its minimal level or even switch off the artificial lights. The optimum distance [Y] from the window to EasySense SNS21x MC can be obtained from Figure 4. This graph shows the relation between the distance from the window to the sensor [Y] and the height [H] of the sensor (H, height of the sensor measured from ceiling to bottom of window sill).

LED indicator

The product contains a LED indicator. This is enabled by default, and it can be disabled through the app. The behavior of the LED is as follows:

Yellow LED on: = vacancy & light sensor are functional.

Red LED on: = motion is detected and hold time is not expired yet.

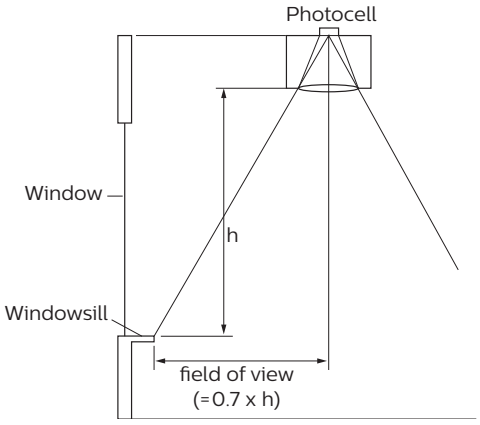

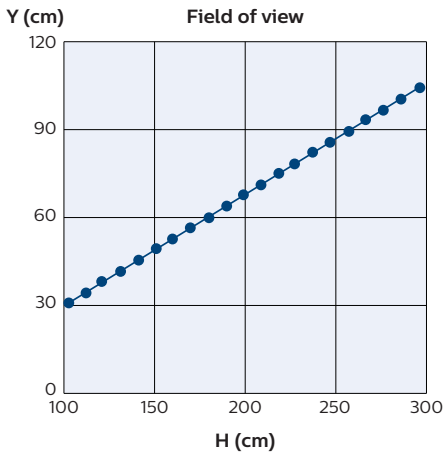

Figure 4. Sensor mounting height from window sill (Y) vs. sensor horizontal distance from window sill (H).

Mechanical design-in

Wiring Information

Applicable wires

Conductor size: solid	0.2 - 0.75 mm²
Conductor size: fine-stranded	0.2 - 0.75 mm²
Conductor size: fine-stranded	0.25 - 0.34 mm² (with insulated formule)
Conductor size: fine-stranded	0.25 - 0.34 mm² (with insulated formule)
AWG	24 - 18
Strip length	7 - 9 mm / 0.28 - 0.35 in

Note: Stranded wires without ferrule should be soldered.

Wire strip length

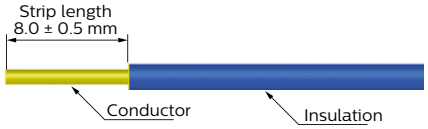

[Conductor: Bare Copper / Strand wire]

Wire insertion

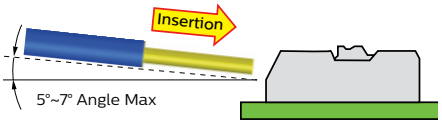

Inserting solid conductors via push-in terminal

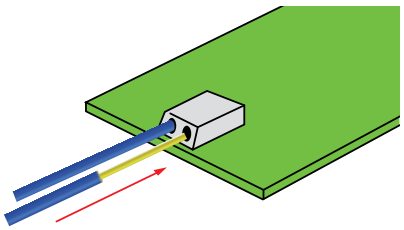

Wire separation from the connector

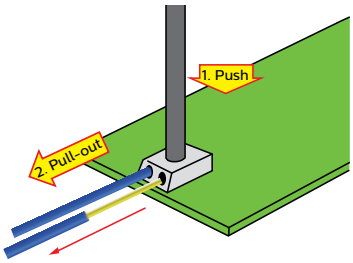

Wire distance for remote mounting

It is recommended to keep the wire distance from sensor to Xitanium SR LED driver less than 15 m and meet the wire gauge requirement to guarantee the performance.

Luminaire-to-luminaire distance

If multiple luminaires with EasySense SNS21x MC are used in the same area, the distance between the different sensors should be kept at least 1.5 m. This distance will minimize a sensor from “seeing” the light variation of neighbouring luminaires and reacting.

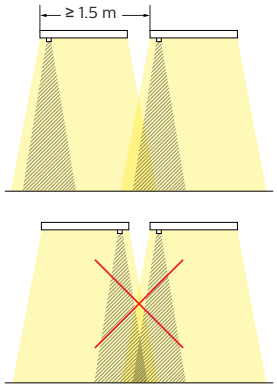

Figure 5. Distance between sensors should be at least 1.5m apart.

Recommendations to design-in around EasySense SNS21x MC with good RF signal

It is recommended to have one side metal wall distance from EasySense SNS21x MC antenna side wall greater than 100mm (assuming other metal walls are further away, see figure 6).

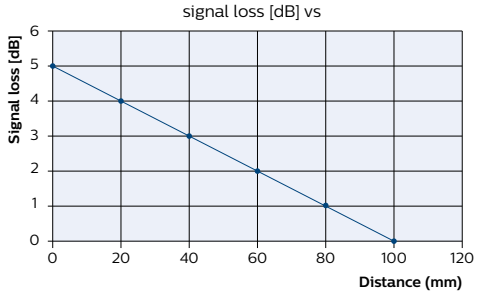

Figure 6. Transmission signal loss [dB] with distance to metal wall [mm]. Closer the metal wall, higher the signal loss.

Mechanical design-in (continued)

Mounting in a luminaire

EasySense SNS21x MC is a luminaire-mount sensor that is directly powered by a Xitanium SR LED driver. It can be mounted to a slot or a cut-out in sheet metal.

Note: When daylight sensing is enabled, it is advised to add a light shield in between LED module and EasySense SNS21x MC in case the sensor is placed close to the LED module and in the same cavity. Without the shield some light can tunnel through the white housing and impact daylight sensing.

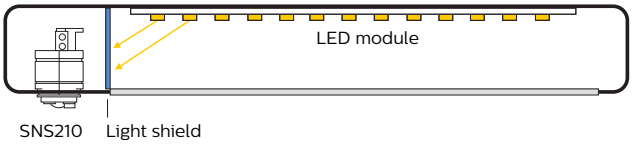

Mounting in a bracket (SMB-50)

The EasySense SNS21x MC can be mounted in a bracket (SMB 50). Refer the figures for details on mounting and design-in into luminaire. All dimensions are in mm.

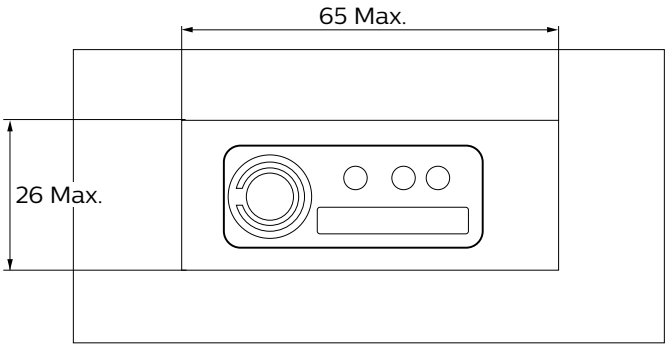

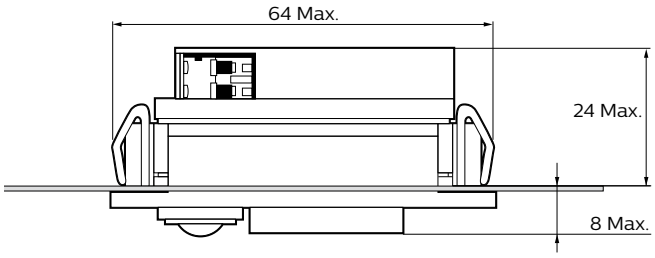

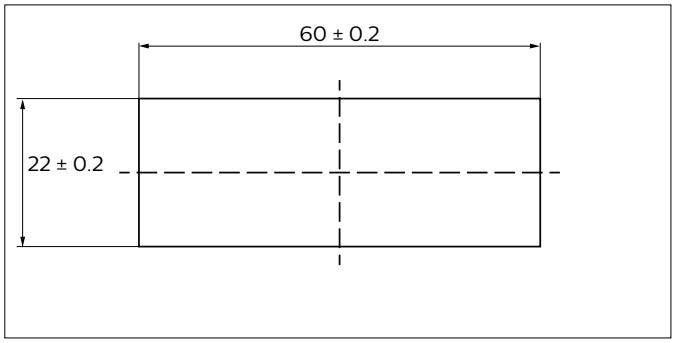

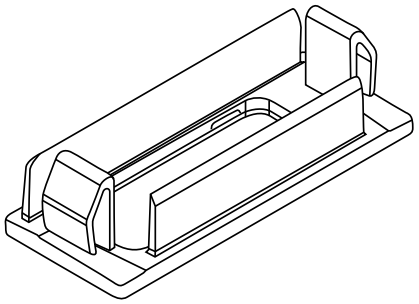

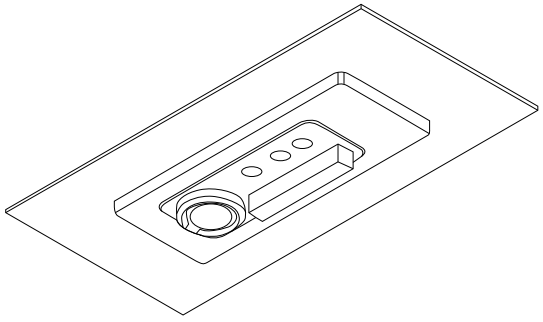

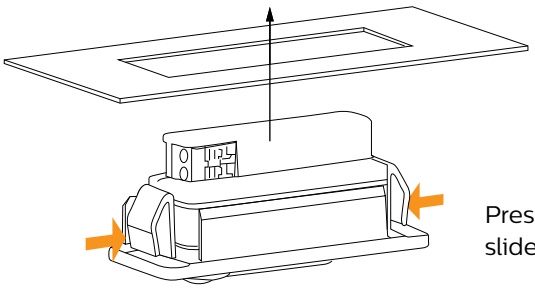

Press springs inwards on both sides before the bracket can slide-in the luminaire hole.

Mechanical design-in (continued)

Installing EasySense SNS21x MC with ceiling mount bracket (CMP/W)

The ceiling mount CMP bracket is available as a bracket without any pre-mounted sensor or cable. The luminaire manufacturer needs to mount the sensor in the CMP bracket and attach cable to it. The cable and screws are available with the accessory.

Caution: The cable length from the EasySense sensor to SR driver should be kept <2m.

For cut-out in the ceiling and mounting, refer to the figures below. All dimensions are in mm.



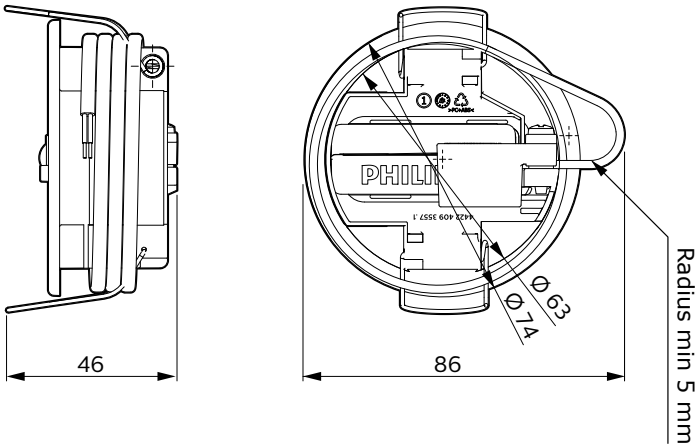

Installer Label Instructions

The SNS21x MC sensors are supplied with three labels which each contain the assigned ZigBee MAC Address. For a typical application, the top two labels can be removed and discarded.



For a network application using a gateway, the labels can be used to identify a luminaire and where it is installed in the building.

Label 1 - Apply to the luminaire
Label 2 - Apply to the floor plan
Label 3 - Remains on the sensor



EasySense SNS21x MC with multiple Philips Xitanium SR LED drivers (1:N application)

When a group of luminaires is in the same daylight condition and needs to be operated at the same level, it is possible to use one sensor to control multiple luminaires.
This can be done in two ways:
(a) Use an SR bridge which can then connect to multiple DALI drivers. For details on SR bridge, please refer to design in guide of SR bridge.
(b) add multiple SR drivers together.

In case EasySense SNS21x MC is connected to multiple Philips Xitanium SR LED drivers, the number of drivers is limited to 10. Not more than 4 drivers should have DALI power supply enabled. To minimize unnecessary losses, it is recommended to turn on only two DALI power supplies.
Each SR driver provides approximately 55mA of current on the DALI bus, and EasySense SNS21x MC is limited to 250mA.

EasySense SNS21x MC sends commands to all connected drivers (using broadcast command); it does not have capabilities to address individual drivers. The light commands are sent as a broadcast command, so occupancy-/daylight-based lighting control and task tuning operate the same on all connected drivers. The readout of energy information from the connected drivers will not function. The energy readout of multiple drivers is foreseen in our roadmap.

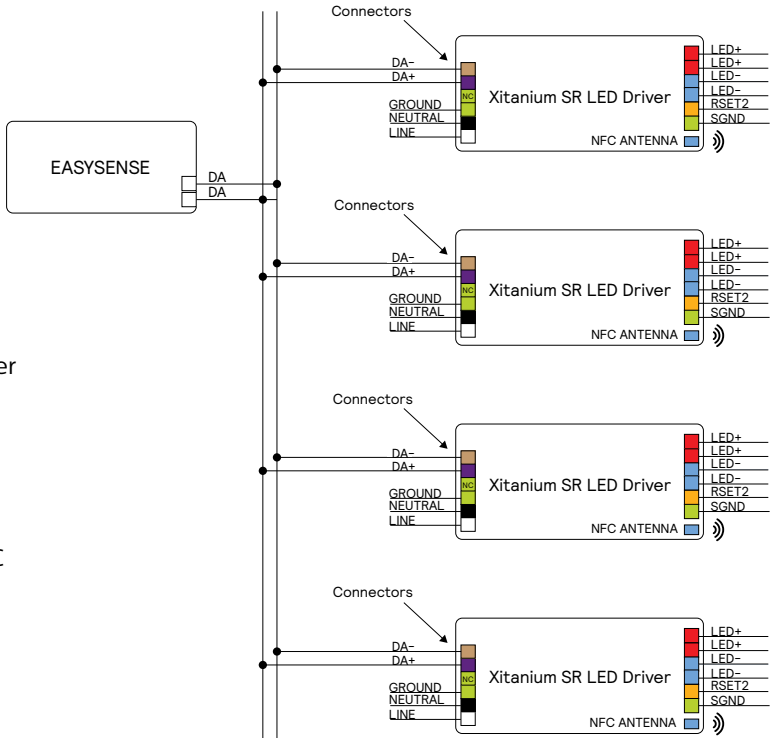

Warning:

Please note the DALI power supply can only be turned on/off on the Philips Xitanium SR LED driver through the MultiOne tool. For this application, please also make sure all drivers that are connected to the sensor have the same wiring polarity. SR drivers are shipped with the power supply on as default.

Luminaire Production Test

To ensure that a luminaire has been assembled correctly i.e. the wiring of the EasySense SNS21x MC sensor to Xitanium SR driver is correct; a visible check can be made. The luminaire on power up goes up 100% for about 6 seconds and then dims down to 30% of maximum light output in the 1st second followed by dimming up to 100% in the next second.
This behaviour is only visible in non-commissioned devices i.e. once grouped using Philips MasterConnect app, this behaviour will cease to exist.

FAQ

Can you use a wall dimmer with EasySense SNS21x MC?	EasySense SNS21x MC can be used with a wireless wall dimmer, e.g., Zigbee green power switch. For list of supported switches, please visit our website.
How does EasySense SNS21x MC compare to Philips ActiLume?	Occupancy sensing and daylight harvesting are similar. Form factors are also similar, with the face of the sensor outside the luminaire having the same size. The portion of EasySense SNS21x MC within the luminaire is slightly deeper and longer to accommodate added functionality. EasySense SNS21x MC includes granular dimming together with energy reporting and works with Philips Xitanium SR LED drivers to eliminate the cost and complexity of a separate power pack.
Is EasySense SNS21x MC a DALI sensor?	EasySense cannot be used as a DALI input device in a DALI network with another DALI controller. EasySense (SNS212 MC) is an SR/D4i certified controller device with built-in sensors. It only works with Xitanium SR/D4i certified drivers or SR Bridges that use DALI protocol for communication.
Can I use EasySense SNS21x MC outside a luminaire?	An accessory option called CMP/w is available to enable ceiling mounting. Wiring to the driver must be kept less than 2m.
Can I use one sensor with multiple luminaires?	Yes, and the ceiling mount option is likely utilized in this use case (called 1:N operation as opposed to 1:1). It usually means turning off the SR/DALI power supplies in all but one of the SR drivers. See EasySense SNS21x MC with multiple SR drivers 1:N application section.
Does EasySense SNS21x MC make sense if I only want to do occupancy sensing?	Yes. Keep “Occupancy Control” enabled in MC App and disable “Daylight Control.”
How does the daylight harvesting feature work?	EasySense SNS21x MC does inbuilt calibration to a fixed lux at desk level. Calibration to a desired light level should be done during commissioning with the MasterConnect App.
Is EasySense SNS21x MC “failsafe”?	Unlike traditional occupancy sensors, EasySense SNS21x MC does not have a mechanical relay. This is a benefit of Philips SR LED drivers, as on/off is done relay-free within the driver. Devices with mechanical relays should be designed so that relay failure results in “lights on.” If an SR driver does not see a digital signal from a device for a long period of time (e.g., loose connection, sensor failure), the driver goes to full programmed output.
Does EasySense SNS21x MC work on 0-10v drivers?	No. EasySense SNS21x MC works on Philips Xitanium SR/D4i Certfied LED drivers to enable two-way digital communication directly to the driver and to eliminate the need for other auxiliary devices.

Contact details

Product datasheets and other applicable documents can be found on the Philips MasterConnect website:

https://www.usa.lighting.philips.com/products/lighting-components/masterconnect

For further information or support, please consult your local Signify sales representative.

Disclaimer

©2020 Signify Holding B.V. All rights reserved.

Note that the information provided in this document is subject to change.

This document is not an official testing certificate and cannot be used or construed as a document authorizing or otherwise supporting an official release of a luminaire. The user of this document remains at all times liable and responsible for any and all required testing and approbation prior to the manufacture and sale of any luminaire.

The recommendations and other advice contained in this document, are provided solely for informational purposes for internal evaluation by the user of this document. Signify does not make and hereby expressly disclaims any warranties or assurances whatsoever as to the accuracy, completeness, reliability, content and/or quality of any recommendations and other advice contained in this document, whether express or implied including, without limitation, any warranties of satisfactory quality, fitness for a particular purpose or non-infringement. Signify has not investigated, and is under no obligation or duty to investigate, whether the recommendations and other advice contained in this document are, or may be, in conflict with existing patents or any other intellectual property rights. The recommendations and other advice contained herein are provided by Signify on an “as is” basis, at the user’s sole risk and expense.

Specifically mentioned products, materials and/or tools from third parties are only indicative and reference to these products, materials and/or tools does not necessarily mean they are endorsed by Signify. Signify gives no warranties regarding these and assumes no legal liability or responsibility for any loss or damage resulting from the use of the information thereto given here.

© 2022 Signify Holding. All rights reserved. The information provided herein is subject to change, without notice. Signify does not give any representation or warranty as to the accuracy or completeness of the information included herein and shall not be liable for any action in reliance thereon. The information presented in this document is not intended as any commercial offer and does not form part of any quotation or contract, unless otherwise agreed by Signify.

Signify North America Corporation
400 Crossing Boulevard,
Bridgewater, NJ 08807
Telephone 855-486-2216

Signify Canada Ltd.
281 Hillmount Road,
Markham, ON, Canada L6C 2S3
Telephone 800-668-9008

Philips and the Philips Shield Emblem are registered trademarks of Koninklijke Philips N.V. All other trademarks are owned by Signify Holding or their respective owners.