BXA & BCA
Installation Instructions

FirstLink Emergency Exit and Combo

bodine

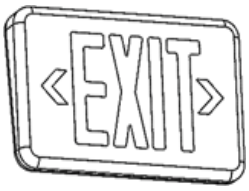

FIRSTLINK

c UL us LISTED

! IMPORTANT SAFEGUARDS !

WHEN USING ELECTRICAL EQUIPMENT, BASIC SAFETY PRECAUTIONS SHOULD ALWAYS BE FOLLOWED, INCLUDING THE FOLLOWING:

READ AND FOLLOW ALL SAFETY INSTRUCTIONS

1. Maximum mounting height is 10 feet. For installations greater than 10 feet, consult factory to ensure that adequate illumination will be available on the path of egress.
2. All servicing should be performed by qualified personnel only.
3. Equipment should be mounted in locations and at heights where it will not readily be subjected to tampering by unauthorized personnel.
4. The use of accessory equipment not recommended by the manufacturer may cause an unsafe condition.
5. Do not let power supply cords touch hot surfaces.
6. Do not mount near gas or electric heaters.
7. CAUTION: To avoid electrical overload, total connected lamp load (factory and field installed) should not exceed output rating.
8. Do not use this equipment for other than intended use.
9. Make sure all connections are in accordance with the National Electrical Code and any local regulations. Turn off AC power to branch circuits to which units will be connected.
10. This product is for use in indoor or damp locations where the ambient temperature is 10°C to 40°C. Not suitable for outdoor, wet, or hazardous locations.
11. This device complies with Part 15 of the FCC Rules. Operation is subject to the following two conditions:(1) this device may not cause harmful interference, and (2) this device must accept any interference that may cause undesired operation.
12. This product must be grounded.

SAVE THESE INSTRUCTIONS



Li - ion

**THIS PRODUCT CONTAINS A RECHARGEABLE LITHIUM-ION BATTERY.
THE BATTERY MUST BE RECYCLED OR DISPOSED OF PROPERLY.**

11/5/25

Bodine © 2025 Signify Holding. All rights reserved.
Collierville, TN USA 38017 • Tech Support 888-263-4638 • www.bodine.com
442296086681

INSTALLATION

Caution: Turn off AC power to the location where these products will be installed. See wiring diagram for connections to AC power. Make sure all connections are in accordance with the National Electrical Code and any local regulations. Connect white wire to neutral. Connect black wire to 120VAC or 277VAC. Connect green wire to ground.

WALL MOUNT

1. Insert a flat blade screwdriver into the two small slots found on bottom of housing between housing and EXIT stencil. Pry stencil from housing. Remove and discard canopy assembly found inside housing. See Figure 1.
2. Remove center knockout in backplate and appropriate keyhole knockouts. Feed AC supply wires using screws provided center hole in backplate. Mount EXIT sign to junction box. See Figure 2.
3. Per the wiring diagram, connect the unit wires to the AC supply using wire nuts (not provided).

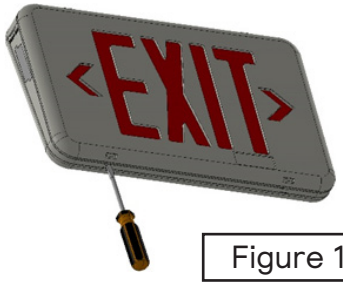

Figure 1

1/10/24

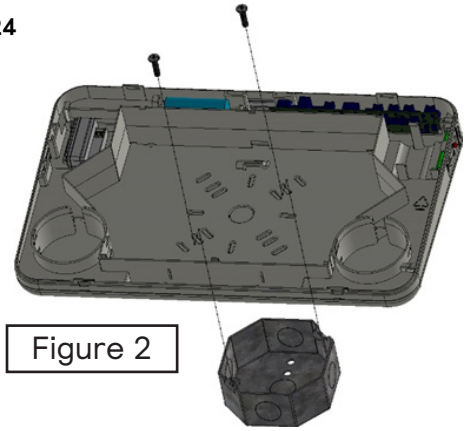

Figure 2

END OR CEILING MOUNT USING CANOPY KIT

1. Insert a flat blade screwdriver into the two small slots found on bottom of housing between housing and EXIT stencil. Pry stencil from housing. Set aside canopy assembly found inside housing. If double faced mounting is desired, repeat by removing the backplate and replacing with the extra EXIT stencil assembly. See Figure 1.
2. Remove plug found in top or left side of housing depending on desired mounting orientation. See Figure 3.
3. Using the screws provided attach cross-bar to junction box ensuring that longer blade of cross-bar faces the junction box. Attach canopy to housing by inserting at a 10˚ angle and rotating until it snaps into place. Feed black, white and green wires found inside product thru center hole in canopy and center hole in cross-bar. See Figure 4.
4. Per the wiring diagram, connect the unit wires to the AC supply using wire nuts (not provided).

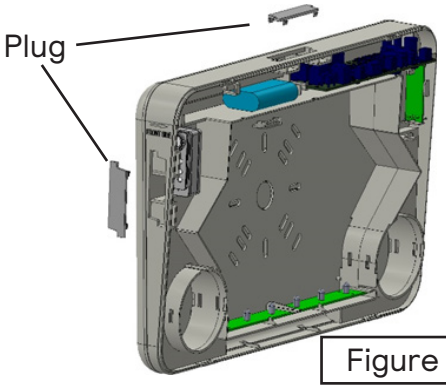

Figure 3

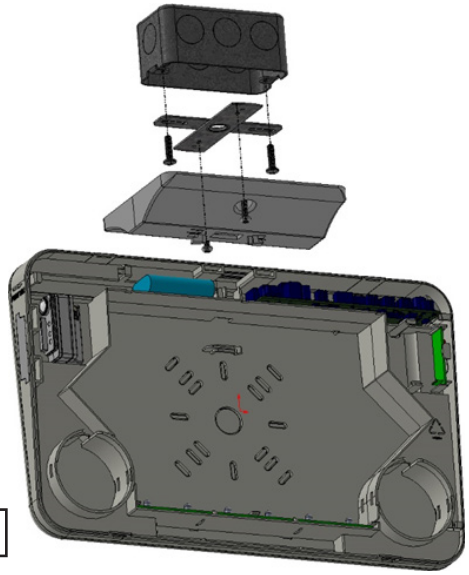

Figure 4

Use Flexible Conduit Only

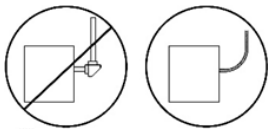

WIRING DIAGRAM

BCA/BXA

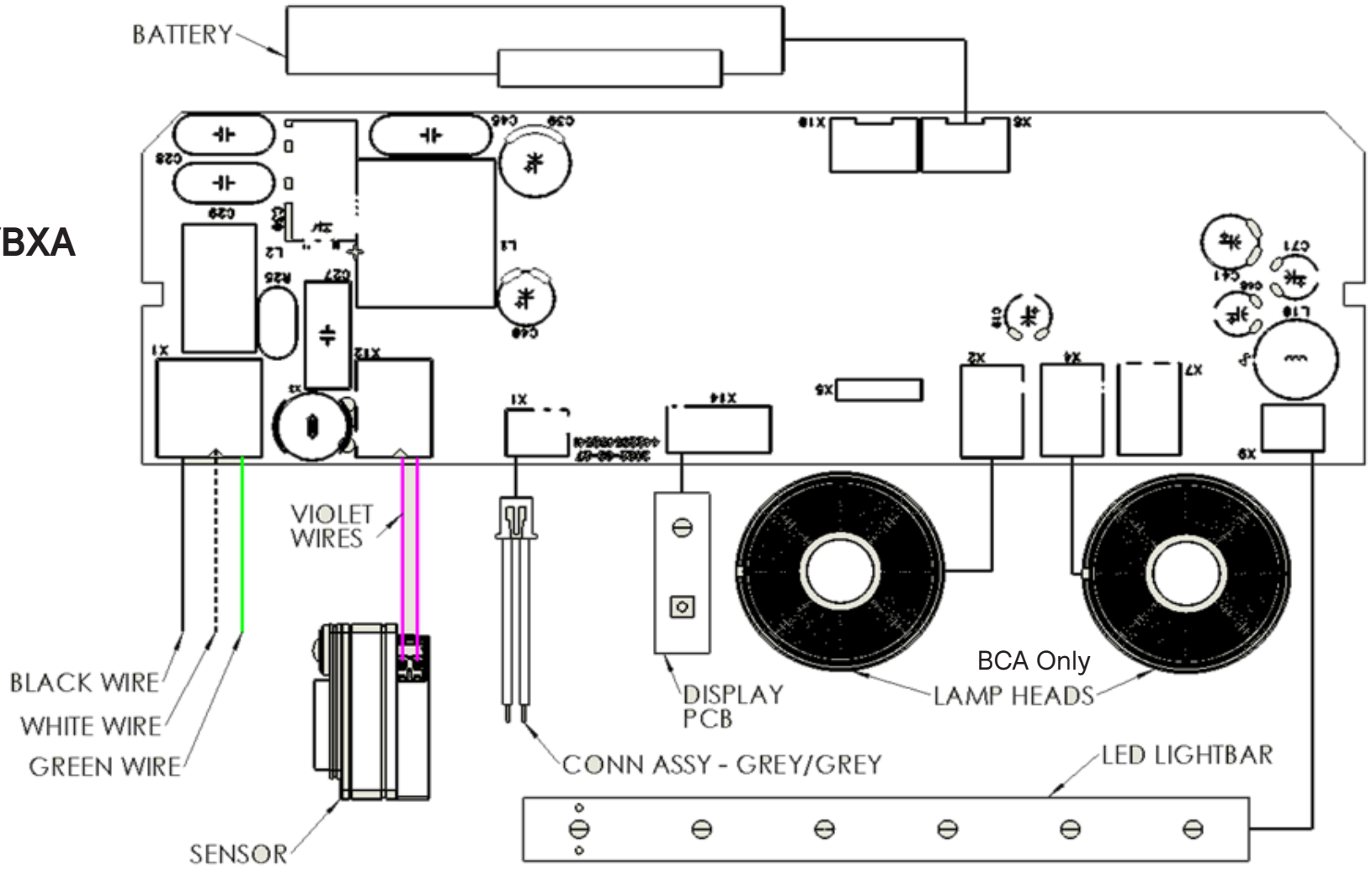

NOTE 1: For short-term testing of the emergency function, the battery must be charged for at least one hour. The emergency driver must be charged for at least 24 hours before conducting a long-term test.

COMPLETE INSTALLATION

- Press wires and wire nuts back into the junction box.
- Snap EXIT stencil removed in Step 1 back onto the housing.
- After installation is complete, restore AC power.
- At this point, the Charging Indicator Light should illuminate indicating the internal battery is charging.
- After charging for one-hour, an automatic commission test will be performed. The emergency driver will switch to the emergency mode for 30 seconds. If, during future self-tests, the power requirement deviates by more than 25%, an error will be triggered indicating an error in the exit signs light sources.
- A short-term discharge test may be conducted after the emergency driver has been charged for one hour. Charge for 24 hours before conducting a long-term discharge test. Refer to OPERATION.
- Press the illuminated test button. The EXIT sign should remain illuminated. The Combo EXIT sign letters should remain illuminated and the lamp heads should illuminate.
- Adjust the lamp heads as required (see adjustment drawing below).
- See following pages for self-test/self-diagnostic system instructions.

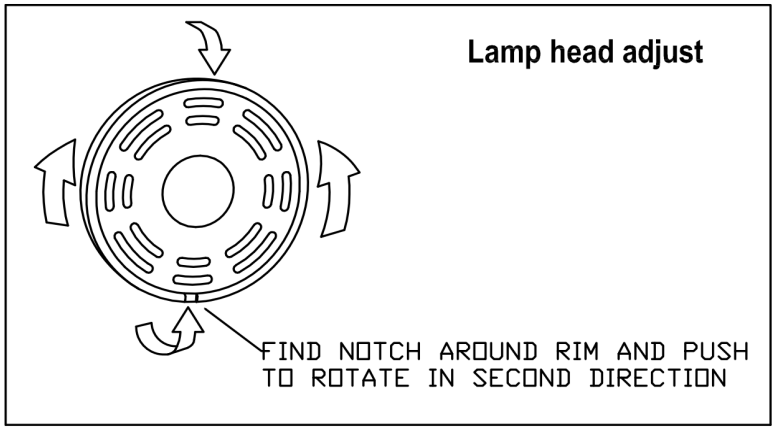

OPERATION

When AC mains power is present, the EXIT sign is lit. The combo EXIT lamp heads will be off.
When AC power fails, the EXIT signs automatically switches to emergency mode, powering the LEDs illuminating the EXIT letters and the combo lamp heads per the rating of the product for a minimum of 90 minutes. When AC power is restored, the EXIT signs return to charging mode.

ABConnect:
Applying AC power to the unit activates the charger circuit, and supplies power to the control/monitor circuit and charging indicator light. This also activates the emergency operation circuit automatically.

To deactivate the unit for storage or shipping, press and hold the test button while the unit is in emergency mode until the Exit sign is turns off.

MAINTENANCE

This self testing EXIT sign automatically performs required routine testing. Results are reported to maintenance personnel via the indicator light.
Note: Maintenance personnel can periodically check the indicator light although this is no longer necessary with FirstLink connectivity. If the indicator light is flashing, follow steps in the Troubleshooting Guide.

Self-Test:
This unit contains a control/monitor circuit that automatically performs a 30-second discharge test once a month and a full 90-minute discharge test once a year. During routine testing, the self-testing emergency driver simulates an AC power failure causing the unit to automatically switch to emergency mode. The unit will monitor the operation of the LED load, battery voltage, and emergency duration. If the emergency system functions properly, then the unit will return to normal mode. Should the unit detect any problems, the indicator light will flash per failure condition (see Troubleshooting Guide) until the condition has been corrected and the unit passes the next test.

To reset a failure indication, briefly push the Test Switch. If the condition has not been corrected by the next scheduled test, the unit will once again detect the failure and signal the failure indicator.

To perform a manual self-diagnostic test, push and hold the Test Switch for minimum of 5 seconds. Once test switch is released the emergency driver will perform a 30 second diagnostic test. During this test, unit will monitor the operation of the LED load, and battery voltage. If the emergency system functions properly, the unit will return to normal mode. Should the unit detect any problems, the indicator light will flash per failure condition (see Troubleshooting Guide) until the condition has been corrected and the unit passes the next test.

FIRSTLINK

This unit is able to be commissioned into a connected emergency system using the FirstLink phone /tablet app. This allows periodic self-tests to be scheduled at a convenient time for the installation site. Once scheduled, the functional tests (30 seconds every 30 days) and duration tests (90 minutes every year) will be conducted automatically and the results stored in the unit awaiting download from the app. Written reports in the form of Excel ".csv" files are available through the app as well. See Bodine FirstLink App Guide (FirstLink App Guide) for more information.

TROUBLESHOOTING GUIDE

If the unit has encountered a problem after installation, then the Illuminated Test Switch will flash the error code with the indicator light. Count the number of times the indicator is OFF to read the number of flashes. Then use the troubleshooting steps to solve the issue.

Bi-Color indicator (color/flashing)	ERROR	CORRECTIVE ACTION
Green/ No Flashes	None	The unit is operating correctly, and the internal battery is fully charged
Green/ Slow Flashes	None	1. The Unit is charging. The main light is operating normal. 2. The Unit is running a self-diagnostic test. The LED Load is operating in Emergency level.
OFF	None	In Emergency mode, or emergency run-time is ended and unit is de-activated.
Red-Green/fast	None	Device Identification command is in progress.
Red / 2x Flashes	Battery	Indicates that a self-test/self-diagnostic test did not meet full duration 1. Charge the unit for the rated recharge time and perform a manual self-diagnostic test. 2. If error is still present, then the battery is past it's useful life and should be replaced.
Red / 3x Flashes	Charging	1. Check input AC mains wiring of Unswitched Hot, Neutral and Ground. 2. Verify Voltage and Frequency are stable and match the product's input rating on the label
Red / 4x Flashes	LED Load, Commissioning	During a self-test/self-diagnostic test, Lamp heads /Lightbar LEDs have burned out, or on an EXIT/Combo, 50% or more of the LEDs have failed. 1. Check for Open or Short circuit on the output connections and correct the connections. 2. After correcting corrections recalibrate the commission value by deactivating the unit. Apply AC mains to activate unit and it will recommission itself after one hour. 3. If unit still exhibits 4x flashes contact customer care.
Red / 5x Flashes	Temperature	Product temperature is beyond its rated temperature range. 1. Ensure unit is within the rated temperature range stated on the product label. 2. Confirm by measuring at the Tc point on the product label.
Alternating Red/Green Flashes	None	The product has been placed into the Identification mode through the app.