

CorePro Plastic LEDbulbs

CorePro LEDbulb ND 13-100W A60 E27 827

CorePro LEDbulbs are compatible with existing fixtures with an E27 or B22 holder and are designed for retrofit replacement of incandescent bulbs. They deliver huge energy savings and minimize maintenance cost.

Product data

General Information	
Cap-Base	E27
Nominal lifetime	15,000 hour(s)
Switching Cycle	50,000
Lighting Technology	LED
Flux measurement reference	Sphere

Light Technical	
Color Code	827 [CCT of 2700K]
Beam Angle (Nom)	200 degree(s)
Luminous Flux	1,521 lm
Color Designation	Warm White (WW)
Luminous Efficacy (rated) (Nom)	117 lm/W
Correlated Color Temperature (Nom)	2700 K
Color Consistency	<6
Color rendering index (CRI)	80
LLMF At End Of Nominal Lifetime (Nom)	70 %

Operating and Electrical	
Line Frequency	50 to 60 Hz
Input Frequency	50 to 60 Hz
Power Consumption	13 W
Lamp Current (Nom)	120 mA
Wattage Equivalent	100 W
Starting Time (Nom)	0.5 s
Warm-up time to 60% light	0.5 s
Power Factor (Fraction)	0.5
Voltage (Nom)	220-240 V

Temperature	
T-Case Maximum (Nom)	85 °C

Controls and Dimming	
Dimmable	No

Mechanical and Housing	
Bulb Finish	Frosted
Bulb Shape	A60

Approval and Application	
Energy Efficiency Class	E
Energy Consumption kWh/1000 h	13 kWh

CorePro Plastic LEDbulbs

EPREL Registration Number	397628
CE mark	Yes
EU RoHS compliant	Yes
EyeComfort	Yes

Full product code	871869649074700
Order code	49074700
Material Nr. (12NC)	929001234502
Numerator - Quantity Per Pack	1
Net Weight (Piece)	0.080 kg
EAN/UPC - Product/Case	8718696490747
Numerator - Packs per outer box	10
EAN/UPC - Case	8718696490754

Application Conditions

can it be used in closed luminaires	No

Product Data

Order product name	CorePro LEDbulb ND 13-100W A60 E27 827
Full product name	CorePro LEDbulb ND 13-100W A60 E27 827

Dimensional drawing

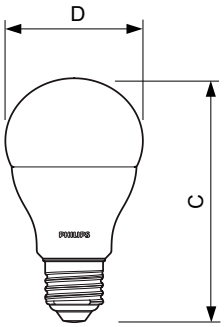

Product	D	C
CorePro LEDbulb ND 13-100W A60 E27 827	60 mm	110 mm

Photometric data

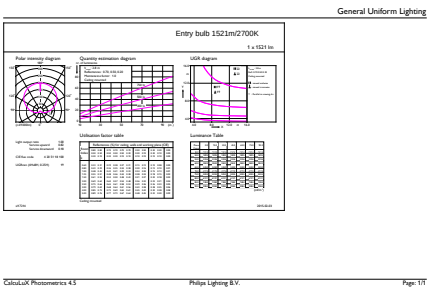

General uniform lighting - CorePro LEDbulb ND 13-100W A60 E27 827

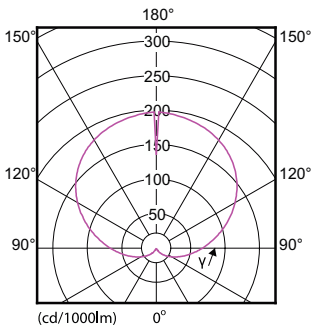

Light Distribution Diagram - CorePro LEDbulb ND 13-100W A60 E27 827

CorePro Plastic LEDbulbs

Photometric data

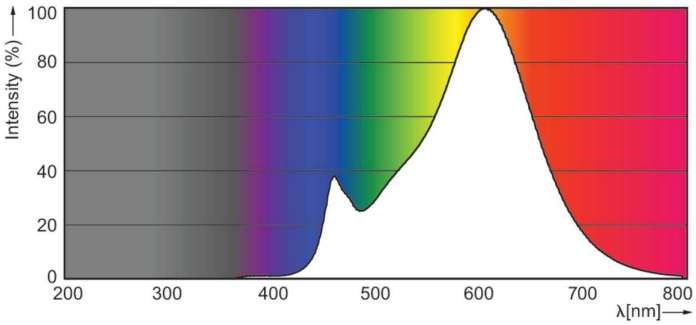

Spectral Power Distribution Colour - CorePro LEDbulb ND 13-100W A60 E27 827

Lifetime

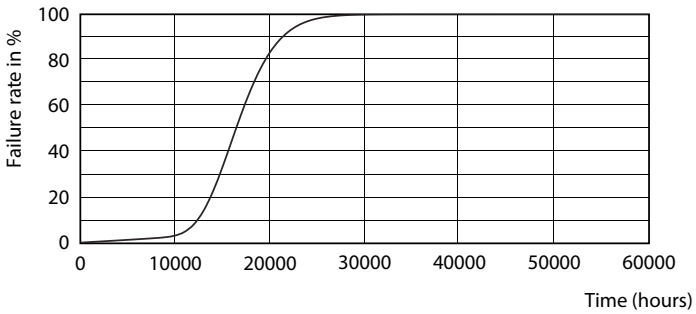

LEDbulb 100W E27 840 FR A60

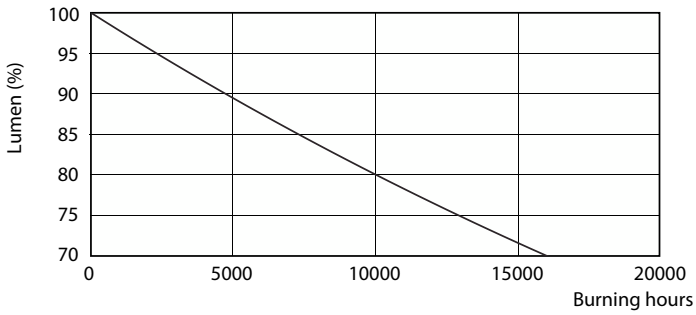

Lumen Maintenance Diagram - CorePro LEDbulb ND 13-100W A60 E27 827

© 2024 Signify Holding All rights reserved. Signify does not give any representation or warranty as to the accuracy or completeness of the information included herein and shall not be liable for any action in reliance thereon. The information presented in this document is not intended as any commercial offer and does not form part of any quotation or contract, unless otherwise agreed by Signify. Philips and the Philips Shield Emblem are registered trademarks of Koninklijke Philips N.V.