Tango Pro

BVP565 LED601/757 370W FP NB

Tango Pro, 60100 lm, 370 W, 757 cool white, depends on driver (1-10V, DALI...), Safety class I

Philips Tango Pro LED floodlight is the fifth generation of the Philips Tango LED floodlight. Tango Pro takes efficiency to the next level, delivering industry-best efficiency in a compact but elegant design. The luminaire can be applied in a versatile range of applications, from area lighting to recreational sports facilities. The LED driver comes in compact and robust housing that meets globally recognized safety standards. Its specially designed heat sink incorporates aesthetics and functionality to ensure excellent reliability. The modular, streamlined luminaire silhouette offers a visually balanced design. Philips Tango Pro LED floodlight is engineered to create brighter and safer environments. Powered by the latest LED technology, Tango Pro delivers superior performance in both light distribution and UltraEfficiency 170lm/W and up to 200lm/W. The long luminaire lifetime and recyclable materials supports your efforts to meet sustainability targets.

Warnings and Safety

- For coastline applications, 2,000 hours (or above) MSP recommended (liability for wear-and-tear damages exempted)
- Not suitable for chemical industrial areas
- Not suitable for installation on moving objects

Product data

General Information	
Driver included	Yes
Service tag	Yes
Value ladder	Performance

Light Technical	
Luminous Flux	60,100 lm
Correlated Color Temperature (Nom)	5700 K
Luminous Efficacy (rated) (Nom)	162 lm/W
Color rendering index (CRI)	70
Light source color	757 cool white
Effective projected area	0.31 m²

Tango Pro

Operating and Electrical	
Input Voltage	220 to 240 V
Line Frequency	50 or 60 Hz
Inrush current	23 A
Inrush time	1.32 ms
Power Consumption	370 W
Power Factor (Fraction)	0.95
Connection	Flying leads/wires
Cable	Cable 1.5 m without plug
Number of products on MCB of 16 A type B	5
Protection class IEC	Safety class I

Controls and Dimming	
Dimmable	DALI
Control interface	depends on driver (1-10V, DALI...)

Mechanical and Housing	
Housing Material	Aluminium die-cast ADC1 - alloy grade (EN AC-47100)
Optical cover material	Polycarbonate
Housing Color	RAL7040
Overall length	515 mm
Overall width	719 mm
Overall height	77 mm
Overall diameter	809 mm

Dimensions (Height x Width x Depth)	77 x 719 x 515 mm
Ingress protection code	IP66 [Dust penetration-protected, jet-proof]
Mech. impact protection code	IK08 [6 J]
Optical cover type	Polycarbonate
Net Weight (Piece)	14.300 kg

Approval and Application	
Flammability mark	-
CE mark	Yes
Ambient temperature range	-40 to +50 °C

Initial Performance (IEC Compliant)	
Luminous flux tolerance	-10% / +10%
Initial chromaticity	(0.329 0.341) SDCM<5
Power consumption tolerance	+/-10%

Product Data	
Order product name	BVP565 LED601/757 370W FP NB
Full product name	BVP565 LED601/757 370W FP NB
Order code	911401615109
Material Nr. (12NC)	911401615109
Numerator - Quantity Per Pack	1
Numerator - Packs per outer box	1

Dimensional drawing

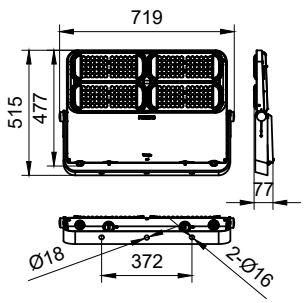

© 2024 Signify Holding All rights reserved. Signify does not give any representation or warranty as to the accuracy or completeness of the information included herein and shall not be liable for any action in reliance thereon. The information presented in this document is not intended as any commercial offer and does not form part of any quotation or contract, unless otherwise agreed by Signify. Philips and the Philips Shield Emblem are registered trademarks of Koninklijke Philips N.V.