GreenSpace G6

DN394B LED40/865 P29PSU D200 WH GMG2HE

GreenSpace G6, 29.3 W, 4000 lm, 6500 K, White reflector and opal cover, Matte, IP20 | Finger-protected

Philips GreenSpace G6 builds on the GreenSpace family's reputation for superb performance, extremely low energy use, and high visual comfort. This next generation of reliable LED downlights comes in a highly-compact design with a deep, recessed architecture and increased reflector depth to highlight the smallest of details. GreenSpace G6 is also a shining example of versatility. This energy-saving LED downlight is available in a comprehensive range of configurations from 600 to 3,550 lumen, with the option to choose fixed, dimmable, or Interact Ready variants. This makes GreenSpace G6 the perfect 'mix and match' solution for potentially broad and extended applications that require different lighting ambiances, with one cohesive luminaire look and feel.

Product data

General Information	
Number of gear units	-
Gear	-
Driver included	Yes
Light source engine type	LED
Service tag	Yes
Value ladder	Performance
Warranty period	3 years

Light Technical	
Luminous Flux	4,000 lm
Correlated Color Temperature (Nom)	6500 K
Luminous Efficacy (rated) (Nom)	140 lm/W
Color rendering index (CRI)	>80
Number of light sources	1
Light source color	865 cool daylight
Optic type	White reflector and opal cover
Unified glare rating CEN	26

Operating and Electrical	
Input Voltage	220 to 240 V
Line Frequency	50 or 60 Hz
Inrush current	19.5 A
Inrush time	0.258 ms
Power Consumption	29.3 W
Power Factor (Fraction)	0.9

GreenSpace G6

Connection	Flying leads/wires
Cable	2×0.75mm² Cable 0.2 m without plug
Number of products on MCB of 16 A type B	68
Suitable for random switching	No
Protection class IEC	Safety class II

Controls and Dimming

Dimmable	No
Control interface	-
Maximum dim level	Not applicable

Mechanical and Housing

Housing Material	Aluminum die-cast
Reflector material	Polycarbonate
Optic material	Polycarbonate
Optical cover material	Polycarbonate
Housing Color	Aluminum
Mounting device	Frame for recessed mounting
Optical cover finish	Matte
Overall height	107 mm
Overall diameter	216 mm
Ingress protection code	IP20 [Finger-protected]
Mech. impact protection code	IK03 [0.3 J]
Optical cover type	Polycarbonate Diffuser
Net Weight (Piece)	0.440 kg

Approval and Application

Glow-wire test	Temperature 650 °C, duration 5 s
Flammability mark	-
CE mark	Yes
ENEC mark	-
Photobiological risk	Photobiological risk group 1 @200mm to EN62778
EU RoHS compliant	Yes
Performance ambient temperature Tq	25 °C
Ambient temperature range	-20 to +40 °C

Initial Performance (IEC Compliant)

Luminous flux tolerance	+/-10%
Initial chromaticity	5
Power consumption tolerance	+/-10%

Product Data

Order product name	DN394B LED40/865 P29PSU D200 WH GMG2HE
Full product name	DN394B LED40/865 P29PSU D200 WH GMG2HE
Full product code	872110370788899
Order code	911401526444
Material Nr. (12NC)	911401526444
Numerator - Quantity Per Pack	1
EAN/UPC - Product/Case	8721103707888
Numerator - Packs per outer box	4
EAN/UPC - Case	8721103707888

Dimensional drawing

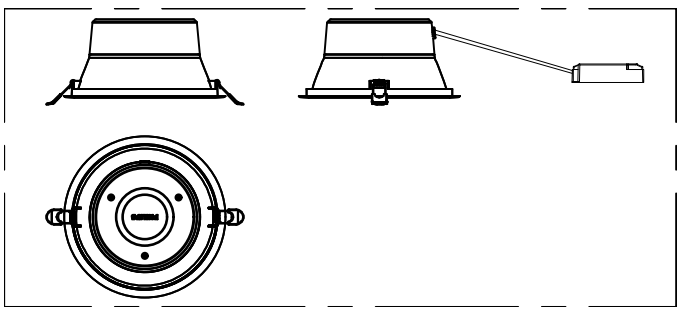

© 2024 Signify Holding All rights reserved. Signify does not give any representation or warranty as to the accuracy or completeness of the information included herein and shall not be liable for any action in reliance thereon. The information presented in this document is not intended as any commercial offer and does not form part of any quotation or contract, unless otherwise agreed by Signify. Philips and the Philips Shield Emblem are registered trademarks of Koninklijke Philips N.V.