LIGHTOLIER by signify

Downlighting

LyteCaster LED 6"

L6 Downlights & Adjustables

Project:
Location:
Cat.No:
Type:
Qty:
Notes:

LyteCaster LED Downlights are ideal general purpose downlighting solution, providing comfortable, quality light. Available in new construction and remodeler frame with interchangeable light engine that is offered in two lumen packages. The downlight is wet location listed and comes in 3 standard option.

Complete unit = Housing + Downlight or Adjustable Light Engine + Trim (order each separately)

Housing

example: L4R20AE1VB

Series	Lumens	Installation (all with AirSeal IC)	Dimming	Version
L6R				VB
L6R LyteCaster 6" downlight (for round and square configurations)	**15** 1500lm **20** 2000lm	**A** New Construction w/ Screws **AN** New Construction w/ Nails **R** Remodeler	**E1** Phase Control (ELV/TRIAC 120V)	**VB** Version B
	15 1500lm **20** 2000lm	**A** New Construction w/ Screws **AN** New Construction w/ Nails **R** Remodeler	**Z10U** 0-10V (Universal 120-277V)	

Downlight Light Engine

example: L6R20935VB

Series	Lumens	CRI/CCT	Finishes	Version
L6R				VB
L6R LyteCaster 6" round downlight (compatible with square trims)	**15** 1500lm **20** 2000lm	**927** 90 CRI / 2700K **930** 90 CRI / 3000K **935** 90 CRI / 3500K **940** 90 CRI / 4000K **950** 90 CRI / 5000K	**–** Specified with Trim below (for downlight models only)	**VB** Version B

Adjustable Light Engine

example: L6R20935WVB

Series	Lumens	CRI/CCT	Finishes	Version
L6RA			W	VB
L6RA Lytecaster 6" round adjustable (trim is integrated)	**15** 1500lm **20** 2000lm	**927** 90 CRI / 2700K **930** 90 CRI / 3000K **935** 90 CRI / 3500K **940** 90 CRI / 4000K **950** 90 CRI / 5000K	**W** White Reflector / White Flange (integral to light engine for adjustable, do not specify Trim seperately)	**VB** Version B

Trim (for downlights only)

example: L6RBW

Series	Style/Finish/Flange
L6R LyteCaster 6" round downlight **L6S** LyteCaster 6" square downlight	**DD** Open Downlight / Clear Diffuse / White Flange **DW** Open Downlight / White Finish / White Flange **BW** Baffle Downlight / White Finish / White Flange

WET LOCATION c UL us LISTED RoHS COMPLIANT

L6 LyteCaster LED 6"

Round & Square downlights and Round adjustables (1500lm & 2000lm)

Features

1. **Housing:** UL listed for direct contact with thermal insulation. Airseal® housing minimizes air leakage to less than 2 CFM at 1.57PSF (or 75PA), which complies with the International Energy Conservation Code, and Washington State Energy Code (Section 502.4). This reduces heat loss and condensation in ceiling.
2. **Housing (new construction):** .026" galvanized steel. Access door for inspection of junction box.
3. **Housing (remodeler):** .032" aluminum. Integral retaining spring secures housing to ceilings up to 2" thick. Removable for access to junction box and ceiling plenum. 5½" maximum for use in 2"x6" joist construction and shallow plenum applications.
4. **Junction Box (new construction):** 2½"x5⅜"x2" (27 cu. in) .032" galvanized steel. UL listed 90°C supply conductors. Rated for branch circuit wiring supplying connected luminaires (daisy chaining).
5. **Junction Box (remodeler):** 2½"x2½"x4⅞" (29 cu in.) .031" galvanized steel. UL listed for 90°C supply conductors. Rated for branch circuit wiring supplying connected luminaires.
6. **Retaining clips:** Permits fast and easy installation of light engine/trim.
7. **Lower frame and top cover:** .026" galvanized steel. Accommodates ceilings up to 1" (25mm) thick. Deep integral lip is ⅜" (9.5mm) with four notches at 90° apart to simplify alignment. Locks into position along length of mounting bars with locking screws.
8. **Driver - ELV /Triac:** 120V, 50/60Hz. RoHS compliant, Class 2 power supply. Complies with FCC rules per Title 47 Part 15 (Class B) for EMI/RFI (conducted & radiated). Class A sound rating.
9. **Driver - 0-10V:** 120/277V, 50/60Hz. RoHS compliant, Class 2 power supply. Complies with FCC rules per Title 47 Part 15 (Class A) for EMI/RFI (conducted & radiated). Class A sound rating.
10. **Mounting bars:** .059" galvanized steel. Bars pivot for easy attachment and wire-in below ceiling line. Bars extend to accommodate 16" (406mm) to 24" (610mm) O.C. joist spacing. Bars can accommodate 12" (305mm) O.C. joist spacing after a slight field modification (see Instruction sheet). Features integral self tapping phillips/square drive screws for secure attachment to wood or metal construction. Also available with integral nails. Attaches to T-bar ceilings without the need of accessories. Bars installed on shortest dimension of frame,but can be easily repositioned 90° from original position.
11. **Ceiling cutout:** 6⅜" (162mm).

Dimming Compatibility

SR1200ZTUNV	Philips Sunrise
IPE04, IP7	Leviton Illumatech
6615-P	Leviton Decora
DVLEV-303P	Lutron Diva
DVTV, DVSCTV	Lutron Diva
S-603P	Lutron Skylark
NFTV, NTSTO-DV	Lutron Nova
QSGRJ-XP, QSGRJ-XE	Lutron Grafix Eye Qs
QSGR-XF	Lutron Grafix Eye Qs

See LED-DIM Specification Sheet for more.

Electronic dimming driver

Class 2 electronic LED Driver with less than 1 second start up.

RoHS compliant, suitable for damp locations. 120v 50/06Hz

>.9 power factor. Sound rating

Class "A" (<24dB). Complies with FCC

CFR title 47 part 15 Class B for EMI/RFI

Dimmable withstandard electronic low voltage (ELV) & Triac dimmers

Dims to less than or equal to 10% of relative high output.

Labels

cULus Listed Type I.C., frames are suitable for damp location and wet listed for use in covered ceilings.

Trims are cULus suitable for damp location.

Complies with Air Leakage.

Warranty

5 year limited warranty

Visit Signify.com/warranties for more information on Signify's standard 5-year limited warranty on complete luminaire systems.

Electrical specifications

Lifetime: Expected lifetime 50,000 hours and backed by a 5-year warranty. (see Signify.com/warranties for details)

Frame-in kit	Lumens	Input volts	Input freq.	Input current	LED drive current	Input power	LED power	THD Factor @ Max Load	Power Factor @ Max Load
L6R15_E1VB	1500	120V	50/60Hz	0.14A	350mA	16W	13W	<20%	>0.9
L6R_Z10UVB	1500	120V	50/60Hz	0.11A	350mA	14W	12W	<10%	>0.9
		277V	50/60Hz	0.05A	350mA	14W	12W	<10%	>0.9
L6R20_E1VB	2000	120V	50/60Hz	0.175A	470mA	19W	16W	<20%	>0.9
L6R20_Z10UVB	2000	120V	50/60Hz	0.15A	450mA	17W	15W	<10%	>0.95
		277V	50/60Hz	0.06A	450mA	17W	15W	<0%	>0.95

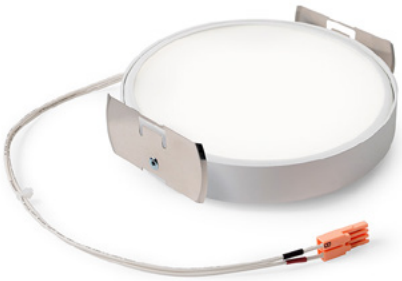

L6 LyteCaster LED 6"

Round & Square downlights and Round adjustables (1500lm & 2000lm)

New construction housing

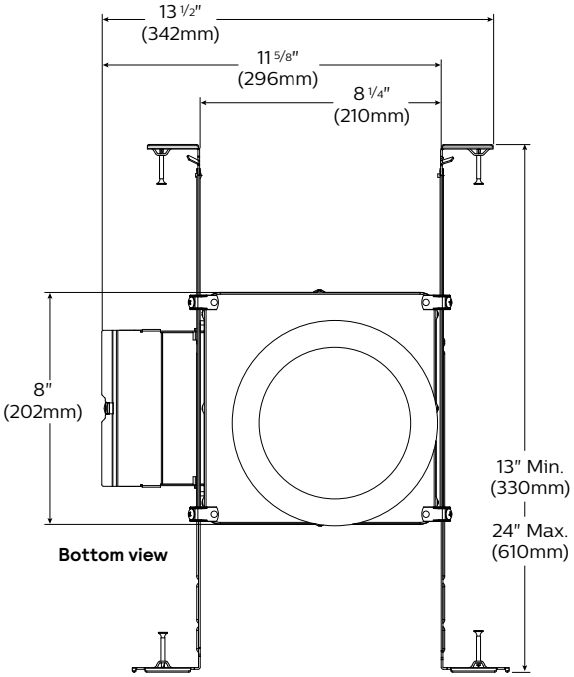

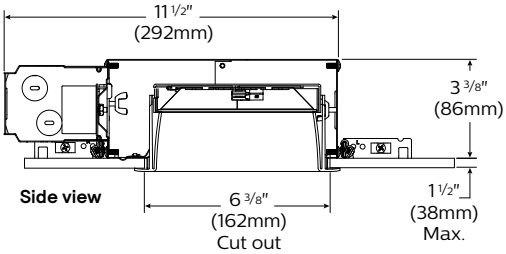

Remodeler housing

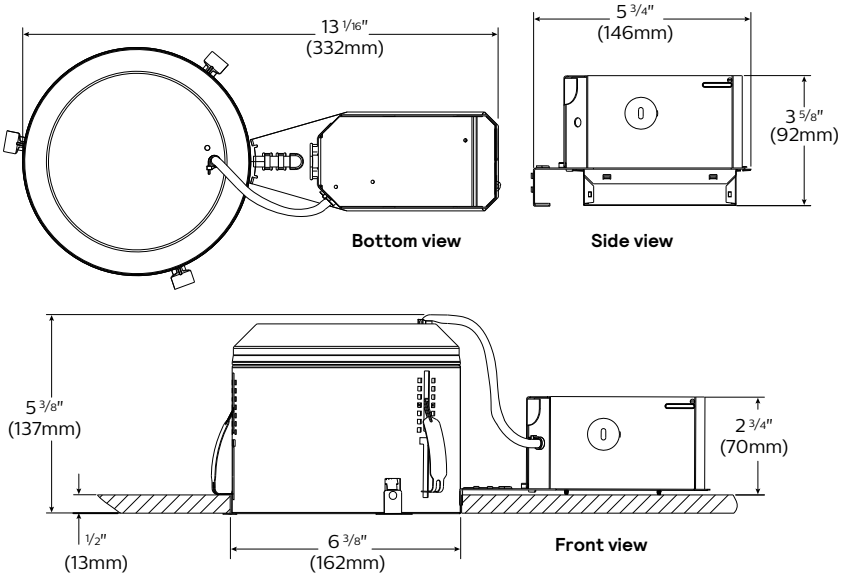

Downlight trim

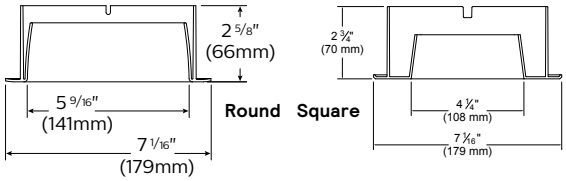

Light engine

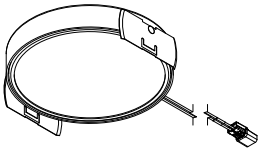

Adjustable light engine/trim

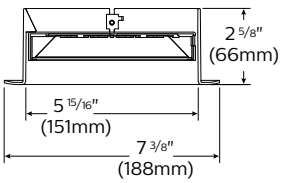

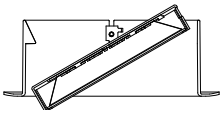

Maximum tilt: 30˚

L6 LyteCaster LED 6"

Round & Square downlights and Round adjustables (1500lm & 2000lm)

Light Engine

Components

1. **Retaining clips:** 29 gauge Stainless Steel, allows tool-less installation of light engine to trim.
2. **Engine housing:** (0.05") thick powder coated aluminum provides integrated thermal management allowing for a low profile at less than 3-1/2" tall.
3. **LED board:** High efficiency mid-flux LED's.
4. **Mixing chamber:** 98% reflective, highly diffuse film.
5. **Diffusion lens:** (0.06") thick acrylic opal lens provides an even source of illumination.
6. **Retaining ring:** (0.04") thick powder coated aluminum, secures module components.
7. **Reflector:** 30% glass reinforced injection molded polycarbonate is durable and provides a 70° cutoff to the source.

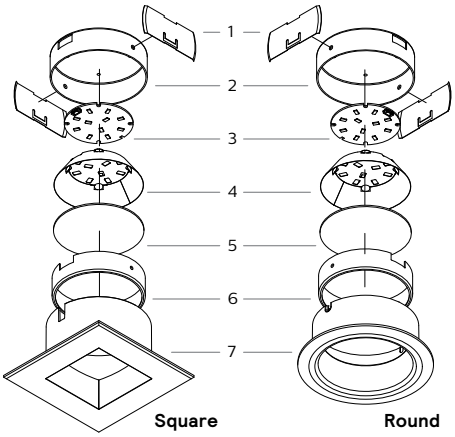

Trim & Finish options

Open Downlight
Clear Diffuse
White Flange
(DD)

Open Downlight
White Finish
White Flange
(DW)

Baffle Downlight
White Finish
White Flange
(BW)

White Reflector
White Flange
(adjustable)

Open Downlight
Clear Diffuse
White Flange
(DD)

Open Downlight
White Finish
White Flange
(DW)

Baffle Downlight
White Finish
White Flange
(BW)

L6 LyteCaster LED 6"

Round & Square downlights and Round adjustables (1500lm & 2000lm)

AccuRender Technology (CRI 90+)

The right light brings colors to life. Our new AccuRender technology helps ensure colors are rendered more accurately and consistently, while doing so as efficiently as CRI 80 products.

Standard CRI 80

Good color rendering and high efficacy

Standard CRI 90

Better color rendering and low efficacy

AccuRender

Best color rendering, color preference and high efficacy

Enjoy design flexibility

Full range of products and options:

- Available soon in across Lightolier portfolio for application flexibility
- Multiple color temperatures (CCTs) and lumen packages offered

Promote savings

High efficacy, with no penalty:

- Energy efficacy compares well to conventional 80 CRI
- Up to 25% more energy savings vs competitor 90 CRI[1]
- Helps meet Title 24 requirements

Show your true colors

High color rendering:

- True to life colors to help energize your environment and render better flesh tones critical for healthcare hospitality and retail applications.
- R_a up to 94 CRI
  R_9 up to 67 CRI
  G_a up to 99 CRI
  C_9 up to 94 CRI
- R_f up to 92 TM-30
  $R_{f,h1}$ up to 91 TM-30
  R_9 up to 100 TM-30
  $R_{cs,h1}$ up to -5% TM-30

Achieve color balance

Best in class color consistency:

- Promote aesthetic harmony in your space with ≤ 2 SDCM

L6 LyteCaster LED 6"

Round & Square downlights and Round adjustables (1500lm & 2000lm)

Round, 1500lm engine, 90CRI / 3500K, 100lm/W at 15W

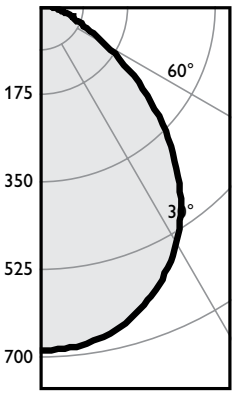

Angle	Mean CP	Lumens
0	686	
5	684	65
10	674	
15	654	184
20	625	
25	589	270
30	544	
35	488	304
40	424	
45	353	271
50	278	
55	205	184
60	140	
65	95	98
70	72	
75	52	55
80	33	
85	14	16
90	0	

Housing:
L6R15AE1VB
L6R15AZ10UVB

Light Engine:
L6R15935VB

Trim:
L6RDW

Output lumens:	1448lm
Input Watts[1]:	14.5W
Spacing Crit.:	1.2
Beam Angle:	91°
Efficacy:	99.9lm/W
CCT[2]:	3500K
CRI:	90
Report no[3]:	STMR-1154-R

Single unit data

Height to Lighted Plane	Initial Center Beam Foot-Candles	Beam Dia. (ft)*
5'	27	6.0'
6'	19	7.2'
7'	14	8.4'
8'	11	9.6'
9'	8	10.8'

* Beam diameter is where foot-candles drop to 50% of maximum.

Multiple unit data - RCR 2

Spacing on center	Initial Center Beam Foot-Candles	Watts per Sq. Ft.
5'	61.0	0.64
6'	40.0	0.42
7'	29.0	0.30
8'	24.0	0.25
9'	19.0	0.20

38'x38'x10' Room, Workplane 2.5' above floor, 80/50/20% Reflectances

Coefficients of utilization

Ceiling	80%				70%		50%		30%		0%
Wall	70	50	30	10	50	10	50	10	50	10	0
RCR	Zonal cavity method - Effective floor reflectance = 20%										
Room Cavity Ratio 0	119	119	119	119	116	116	111	111	106	106	100
1	110	110	106	102	104	98	100	94	96	92	87
2	102	102	94	88	93	82	89	80	86	79	75
3	94	94	84	77	83	71	80	69	77	68	65
4	87	87	76	68	74	61	72	60	70	60	57
5	80	80	68	60	67	54	65	53	63	53	50
6	74	74	62	54	61	48	60	47	58	47	45
7	69	69	57	49	56	43	55	43	53	42	40
8	65	65	52	44	51	39	50	38	49	38	36
9	61	61	48	40	48	35	46	35	45	35	33
10	57	57	45	37	44	32	43	32	42	32	30

Zonal lumens & percentages

Zone	Lumens	%Luminaire
0-30	520	35.9%
0-40	824	56.9%
0-60	1279	88.3%
0-90	1448	100.0%

CRI and CCT adjustment factors

90CRI 2700K:	= 0.92
90CRI 3000K:	= 0.96
90CRI 3500K:	= 1.00
90CRI 4000K:	= 1.02
90CRI 5000K:	= 1.02

Round, 2000lm engine, 90CRI / 3500K, 101lm/W at 18W

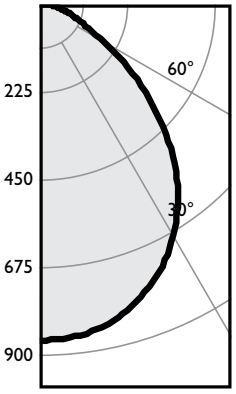

Angle	Mean CP	Lumens
0	860	
5	856	81
10	844	
15	819	231
20	784	
25	738	340
30	683	
35	614	382
40	533	
45	445	342
50	351	
55	259	233
60	178	
65	121	124
70	91	
75	66	70
80	41	
85	18	20
90	0	

Housing:
L6R20AE1VB
L6R20AZ10UVB

Light Engine:
L6R20935VB

Trim:
L6RDW

Output lumens:	1822lm
Input Watts[1]:	18.1W
Spacing Crit.:	1.2
Beam Angle:	92°
Efficacy:	100.7lm/W
CCT[2]:	3500K
CRI:	90
Report no[3]:	STMR-661

Single unit data

Height to Lighted Plane	Initial Center Beam Foot-Candles	Beam Dia. (ft)*
5'	34	6.0'
6'	24	7.2'
7'	18	8.4'
8'	13	9.6'
9'	11	10.8'

* Beam diameter is where foot-candles drop to 50% of maximum.

Multiple unit data - RCR 2

Spacing on center	Initial Center Beam Foot-Candles	Watts per Sq. Ft.
5'	76.0	0.80
6'	50.0	0.53
7'	36.0	0.38
8'	30.0	0.31
9'	24.0	0.25

38'x38'x10' Room, Workplane 2.5' above floor, 80/50/20% Reflectances

Coefficients of utilization

Ceiling	80%				70%		50%		30%		0%
Wall	70	50	30	10	50	10	50	10	50	10	0
RCR	Zonal cavity method - Effective floor reflectance = 20%										
Room Cavity Ratio 0	119	119	119	119	116	116	111	111	106	106	100
1	110	106	103	100	104	98	100	95	96	92	87
2	102	94	88	83	93	82	89	81	86	79	75
3	94	84	77	71	83	70	80	69	77	68	65
4	86	75	67	61	74	61	72	60	69	59	56
5	80	68	60	53	67	53	65	53	63	52	50
6	74	61	53	47	61	47	59	47	57	46	44
7	69	56	48	42	55	42	54	42	52	41	39
8	64	51	43	38	51	38	49	37	48	37	35
9	60	47	39	34	47	34	46	34	45	34	32
10	56	44	36	31	43	31	42	31	41	31	29

Zonal lumens & percentages

Zone	Lumens	%Luminaire
0-30	652	35.8%
0-40	1034	56.8%
0-60	1608	88.3%
0-90	1822	100.0%

CRI and CCT adjustment factors

90CRI 2700K:	= 0.92
90CRI 3000K:	= 0.96
90CRI 3500K:	= 1.00
90CRI 4000K:	= 1.02
90CRI 5000K:	= 1.02

1. Wattage controlled to within +/- 5%.
2. Correlated Color Temperature within specs as defined in ANSI_NEMA_ANSLG C78.377-2008: Specifications for the Chromaticity of Solid State Lighting Products.
Note: Tested using absolute photometry as specified in LM79: IESNA Approved Method for the Electrical and Photometric Measurements of Solid-State Lighting Products.

L6R LyteCaster LED 6"

Round & Square downlights and Round adjustables (1500lm & 2000lm)

Square, 1000lm engine, 90CRI / 3500K, 89lm/W at 10W

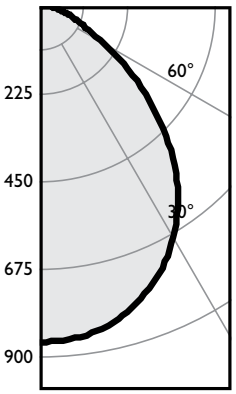

Angle	Mean CP	Lumens
0	633	
5	629	60
10	617	
15	597	168
20	569	
25	533	245
30	491	
35	441	275
40	386	
45	326	251
50	263	
55	201	180
60	143	
65	96	98
70	67	
75	47	50
80	29	
85	13	15
90	0	

Housing:
L6R15AE1VB
L6R15AZ10UVB

Light Engine:
L6R15935VB

Trim:
L6SDW

Output lumens:	1342lm
Input Watts[1]:	14.3W
Spacing Crit.:	1.18
Beam Angle:	92°
Efficacy:	93.8lm/W
CCT[2]:	3500K
CRI:	90
Report no[3]:	STMR-664

Single unit data

Height to Lighted Plane	Initial Center Beam Foot-Candles	Beam Dia. (ft)*
5'	25	5.9'
6'	18	7.1'
7'	13	8.3'
8'	10	9.4'
9'	8	10.6'

* Beam diameter is where foot-candles drop to 50% of maximum.

Multiple unit data - RCR 2

Spacing on center	Initial Center Beam Foot-Candles	Watts per Sq. Ft.
5'	56.0	0.63
6'	37.0	0.42
7'	26.0	0.30
8'	22.0	0.25
9'	18.0	0.20

38'x38'x10' Room, Workplane 2.5' above floor, 80/50/20% Reflectances

Coefficients of utilization

Ceiling	80%				70%		50%		30%		0%
Wall	70	50	30	10	50	10	50	10	50	10	0
RCR	Zonal cavity method - Effective floor reflectance = 20%										
Room Cavity Ratio 0	119	119	119	119	116	116	111	111	106	106	100
1	110	110	106	102	104	98	100	94	96	92	87
2	102	102	94	88	93	82	89	80	86	79	75
3	94	94	84	77	83	71	80	69	77	68	65
4	87	87	76	68	74	61	72	60	70	60	57
5	80	80	68	60	67	54	65	53	63	53	50
6	74	74	62	54	61	48	60	47	58	47	45
7	69	69	57	49	56	43	55	43	53	42	40
8	65	65	52	44	51	39	50	38	49	38	36
9	61	61	48	40	48	35	46	35	45	35	33
10	57	57	45	37	44	32	43	32	42	32	30

Zonal lumens & percentages

Zone	Lumens	%Luminaire
0-30	473	35.2%
0-40	748	55.7%
0-60	1179	87.9%
0-90	1342	100.0%

CRI and CCT adjustment factors

90CRI 2700K:	= 0.92
90CRI 3000K:	= 0.96
90CRI 3500K:	= 1.00
90CRI 4000K:	= 1.02
90CRI 5000K:	= 1.02

Square, 1500lm engine, 90CRI / 3500K, 81lm/W at 14W

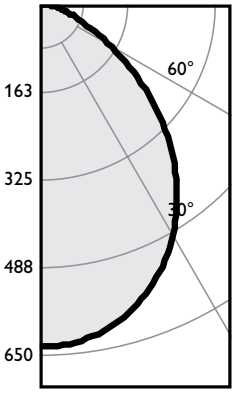

Angle	Mean CP	Lumens
0	807	
5	803	76
10	788	
15	762	215
20	725	
25	680	313
30	626	
35	562	351
40	491	
45	415	319
50	335	
55	256	229
60	183	
65	123	125
70	86	
75	60	64
80	37	
85	17	19
90	0	

Housing:
L6R20AE1VB
L6R20AZ10UVB

Light Engine:
L6R20935VB

Trim:
L6SDW

Output lumens:	1711lm
Input Watts[1]:	18.1W
Spacing Crit.:	1.18
Beam Angle:	91°
Efficacy:	94.5lm/W
CCT[2]:	3500K
CRI:	90
Report no[3]:	STMR-665

Single unit data

Height to Lighted Plane	Initial Center Beam Foot-Candles	Beam Dia. (ft)*
5'	32	5.9'
6'	22	7.1'
7'	16	8.3'
8'	13	9.4'
9'	10	10.6'

* Beam diameter is where foot-candles drop to 50% of maximum.

Multiple unit data - RCR 2

Spacing on center	Initial Center Beam Foot-Candles	Watts per Sq. Ft.
5'	72.0	0.80
6'	47.0	0.53
7'	34.0	0.38
8'	28.0	0.31
9'	22.0	0.25

38'x38'x10' Room, Workplane 2.5' above floor, 80/50/20% Reflectances

Coefficients of utilization

Ceiling	80%				70%		50%		30%		0%
Wall	70	50	30	10	50	10	50	10	50	10	0
RCR	Zonal cavity method - Effective floor reflectance = 20%										
Room Cavity Ratio 0	119	119	119	119	116	116	111	111	106	106	100
1	110	106	103	100	104	98	100	95	96	92	87
2	102	94	88	83	93	82	89	81	86	79	75
3	94	84	77	71	83	70	80	69	77	68	65
4	86	75	67	61	74	61	72	60	69	59	56
5	80	68	60	53	67	53	65	53	63	52	50
6	74	61	53	47	61	47	59	47	57	46	44
7	69	56	48	42	55	42	54	42	52	41	39
8	64	51	43	38	51	38	49	37	48	37	35
9	60	47	39	34	47	34	46	34	45	34	32
10	56	44	36	31	43	31	42	31	41	31	29

Zonal lumens & percentages

Zone	Lumens	%Luminaire
0-30	603	35.8%
0-40	954	56.1%
0-60	1503	88.3%
0-90	1711	100.0%

CRI and CCT adjustment factors

90CRI 2700K:	= 0.92
90CRI 3000K:	= 0.96
90CRI 3500K:	= 1.00
90CRI 4000K:	= 1.02
90CRI 5000K:	= 1.02

1. Wattage controlled to within +/- 5%.
2. Correlated Color Temperature within specs as defined in ANSI_NEMA_ANSLG C78.377-2008: Specifications for the Chromaticity of Solid State Lighting Products.
Note: Tested using absolute photometry as specified in LM79: IESNA Approved Method for the Electrical and Photometric Measurements of Solid-State Lighting Products.

signify

© 2025 Signify Holding. All rights reserved. The information provided herein is subject to change, without notice. Signify does not give any representation or warranty as to the accuracy or completeness of the information included herein and shall not be liable for any action in reliance thereon. The information presented in this document is not intended as any commercial offer and does not form part of any quotation or contract, unless otherwise agreed by Signify.

Signify North America Corporation
400 Crossing Blvd, Suite 600
Bridgewater, NJ 08807
Telephone: 800-555-0050

Signify Canada Ltd.
281 Hillmount Road,
Markham, ON, Canada L6C 2S3
Telephone: 800-668-9008

All trademarks are owned by Signify Holding or their respective owners.