LEDALITE

Linear

SyncLine

Wall

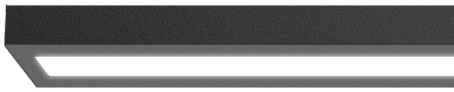

SyncLine's slim design rivals that of high-end LED luminaires with performance that's in sync with your budget. SyncLine offers premium quality of light with AccuRender high efficacy CRI 90+. Options include Interact, AccuRender Tunable White and new BioUp high melanopic tunable technology to enhance your daily life.

SyncLine includes AccuRender technology for the highest color quality at the highest efficacy.

Project:
Location:
Cat.No:
Type:
Line ID: Qty:
Notes:

Ordering guide [11]

example: SL36L9353050AN08DEGNNNW, WA

Family	Version [10]	Distribution	Source	CRI/CCT [1,5]
SL			L	
SL SyncLine	**2** Wall - one light engine	**1** Direct **3** Indirect **6** Direct / Indirect	**L** LED	**950** CRI 90, 5000K **940** CRI 90, 4000K **935** CRI 90, 3500K **930** CRI 90, 3000K **927** CRI 90, 2700K **9T2** CRI 90, 2700-6500K 2ch Tunable White (confirm controls) **BIO** CRI 80+, 2700-5000K 2ch BioUp (confirm controls)
	3 Wall - two light engines	**6** Direct / Indirect		

Lumens [1]			Optics	Run Length
One light engine [10]	**Total fixture lumens** **70** 7000 lm/4ft **60** 6000 lm/4ft **50** 5000 lm/4ft **40** 4000 lm/4ft **30** 3000 lm/4ft **20** 2000 lm/4ft	**NN** D/I lumens determined by optics	**AJ** Acrylic Diffuser (100% Down, Max 4000lm/4ft) **NA** Dust Cover (100% Up) **NB** Open - No Dust Cover (100% Up) **AA** Acrylic Diffuser/Dust Cover (30% Down/70% Up) **AB** Acrylic Diffuser/Open - No Dust Cover (20% Down/80% Up) **AD** Acrylic Diffuser/Dust Cover (50% Down/50% Up) **AE** Acrylic Diffuser/Open - No Dust Cover (40% Down/60% Up) **AG** Acrylic Diffuser/Dust Cover (80% Down/20% Up, Max 5000lm/4ft)	**04** 4ft **06** 6ft **08** 8ft **XX** Continuous run in 2ft increments > 4ft (please specify)
Two light engines [10]	**Lumens (Direct)** **40** 4000 lm/4ft **35** 3500 lm/4ft **30** 3000 lm/4ft **25** 2500 lm/4ft **20** 2000 lm/4ft **15** 1500 lm/4ft **10** 1000 lm/4ft	**Lumens (Indirect)** **70** 7000 lm/4ft **60** 6000 lm/4ft **50** 5000 lm/4ft **40** 4000 lm/4ft **30** 3000 lm/4ft **20** 2000 lm/4ft **10** 1000 lm/4ft	**AN** Acrylic Diffuser Down/Freeform lens up D/I ratio determined by lumen packages	

Voltage [3]	Driver [3, 7]	Circuit [2, 8, 10]	Wiring Option [2, 3, 6, 8, 12]	System/Controls [4, 7, 9]
D UNV 120-277V **3** 347V	**X** Advance 0-10V (10% Dim) **E** Advance Xitanium 0-10V (1% Dim)	**1** Single Circuit **V** Single Circuit + 1 Thru Wire (BP Trigger) **F** Single Circuit + 4 Thru Wires (Mains & Dimming) **G** Dual Circuit (Up/Dn) **W** Dual Circuit (Up/Dn) + 1 Thru Wire (BP Trigger)	**N** None **B** Battery Pack **E** Auxiliary Wiring **G** GTD (please specify voltage)	**NN** None
D UNV 120-277V	**D** Advance Xitanium DALI-2 (5% Dim) **H** Lutron EcoSystem LDE1 (<1% Dim, Fade-to-Black)			
D UNV 120-277V	**S** Advance Xitanium Sensor Ready (1% Dim)	**1** Single Circuit **V** Single Circuit + 1 Thru Wire (BP Trigger)	**N** None **B** Battery Pack **R** UL924 Sensor Bypass Relay	**NN** None **RA** Interact Pro RF sensor, enables wireless connected lighting control
D UNV 120-277V	**F** Advance FlexTune Sensor Ready (1% Dim) **2** 0-10V 2ch (1% Dim) **6** DALI-2 DT6 2ch (1% Dim) **8** DALI-2 DT8 2ch (1% Dim)	**1** Single Circuit **V** Single Circuit + 1 Thru Wire (BP Trigger)	**N** None	**NN** None **RA** Interact Pro RF sensor, enables wireless connected lighting control

Finish	Option	Mount Type
	N	WA
W Standard White **B** Black **T** Titanium Silver **C** Custom	**N** None	**WA**

Footnotes 1-6 (hover here to view or see last page of spec sheet)
Footnotes 7-12 (hover here to view or see last page of spec sheet)

MADE IN CANADA quickship interact ready.

SyncLine wall

Options and dimensions

Standalone

Keep it simple with standalone modules, available in 3 standard lengths (consult Ledalite for custom lengths).

4ft

6ft

8ft

Continuous run

Create continuous runs in 2ft increments with 4,6 & 8ft modules.

Optical configurations

SyncLine is available with one or two light engines for combined or independent Direct/Indirect control.

One light engine

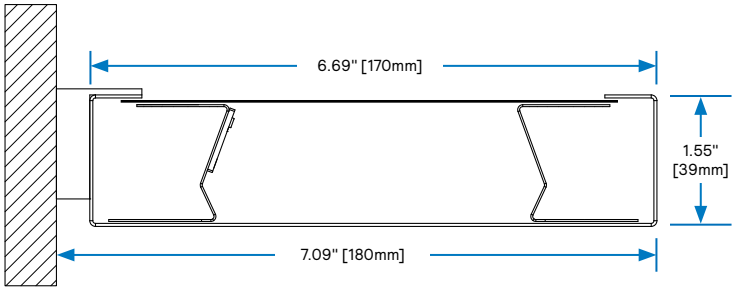

Two light engines

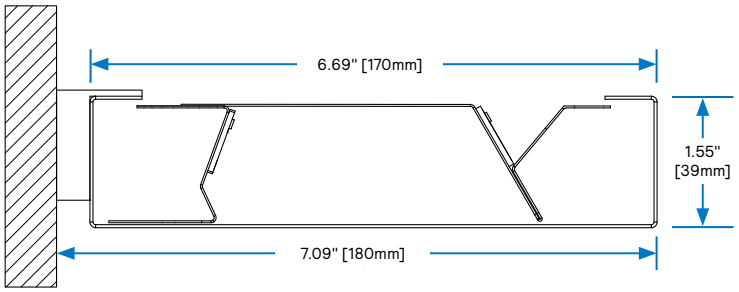

Finish options

White (W)

Titanium Silver (T)

Black (B)

Custom (C)

SyncLine wall

Options and dimensions

Front & Bottom Views

Wall Mount Option

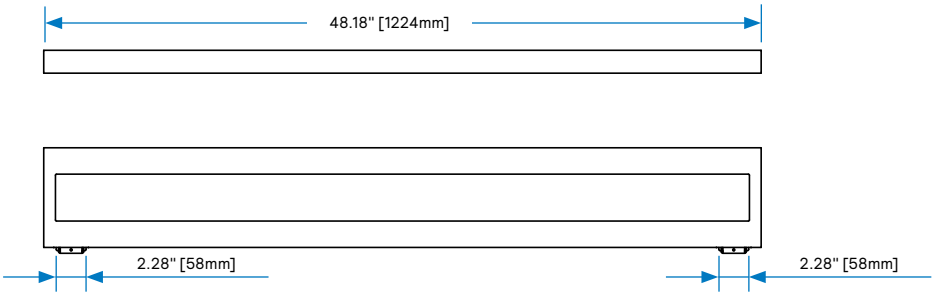

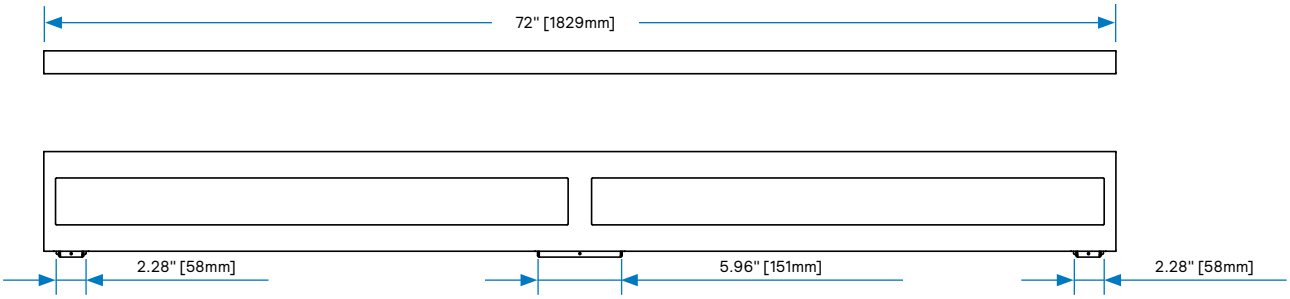

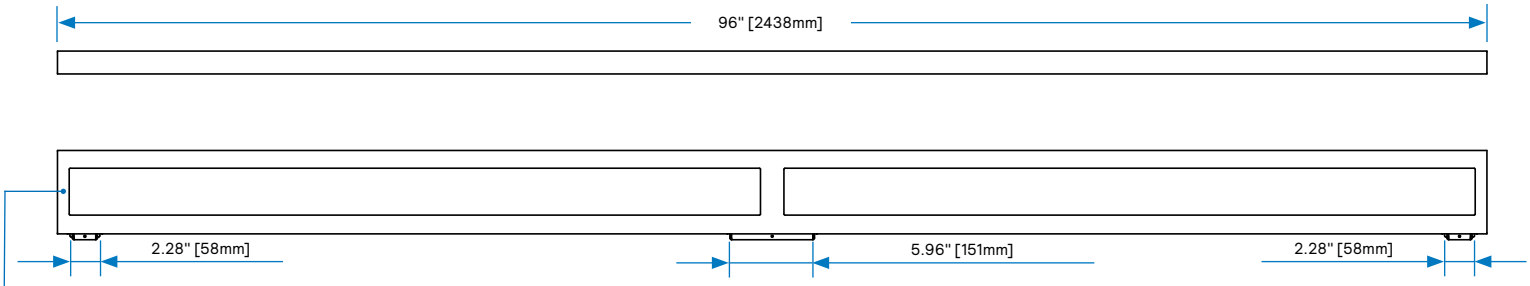

Note: Sensors are mounted at left end of wall mounted luminaires, in this case, the lens aperture is shorter.

Nominal	Housing Length	Lens Aperture	Endcap Thickness
4ft	**48.18"** [1224mm]	46.5" [1180mm]	0.04" [1mm]
6ft	**72.0"** [1829mm]	34.3" [872mm] each	0.04" [1mm]
8ft	**96.0"** [2438mm]	46.3" [1177mm] each	0.04" [1mm]

SyncLine wall

Specifications

Optical System

One Light Engine: Lateral-facing LED arrays deliver light into both the upper and lower hemispheres, giving a highly efficient wide, homogeneous upper assymetric distribution and a lower tilted lambertian distribution.

Five distributions are available from fully Direct to fully Indirect with three Direct/Indirect ratios in between.

Two Light Engines: Lateral-facing facing LED arrays are designed into separate chambers and allow a multitude of direct/indirect lumen package combinations for the ultimate in distribution control.

An optional dust cover is available in both one and two light engine models.

Housing

Precision die-formed, 20 gauge cold-rolled steel housing.

Endcaps

Flat, die-formed, 20 gauge cold-rolled steel endcaps.

Finish

Housing and endcaps are coated with a high quality electrostatically applied, thermally cured polyester powder coat finish. Available in standard Matte White, Black or Titanium Silver. SyncLine can also be specified in any custom color upon request for a one-time setup charge. Optional sensors default color is white. Fixtures with black finish have black sensors (consult factory for other combinations).

Mounting

Wall: Tilt and leveling adjustment is provided via sturdy, discrete 14 gauge wall mount brackets that hold the luminaire <1/2" [10mm] off the wall at fixture ends and joints.

Brackets are independently tested to stringent safety standards.

Joints

Self-aligning joining system with hands-free pre-joining wire access.

Weight

Maximum 2.6 lbs/ft.

Electrical

Fixtures are factory pre-wired to section ends with quick-wire connectors and tested for all circuits and backup battery packs. LED boards, drivers, sensors and battery packs are easily field replaceable with access from below the ceiling.

Power cords are supplied in white, and not visible once installed.

Standard Drivers

Advance 0-10V, 10% Dimming.
Advance Xitanium 0-10V, 1% Dimming.
Advance Xitanium DALI-2, 5% Dimming.
Advance Xitanium Sensor Ready, 1% Dimming.
Lutron EcoSystem LDE1, 1% Dimming with Soft-On and Fade-to-Black.

2ch Tunable Drivers

Advance FlexTune Sensor Ready, 1% Dimming.
0-10V, 1% Dimming.
DALI-2 DT6 or DT8, 1% Dimming.

Class 2 rated output. Consult Ledalite for other available drivers.

Standard Battery Packs

Bodine Battery Pack, 90 min, 10W, Class 2 rated output.
Lumen output = 10W x luminaire efficacy x 1.1 Typical output ~1300lm.

Lumen Maintenance

LEDs have been tested by the manufacturer in accordance with IESNA

LM-80-15. At an ambient temperature of 25°C, the LED lumen maintenance expectation according to IES TM-21-11 is:

L_{80} (10k) > 60,000 hours (Reported methodology).

Source Color

LEDs rated for color rendering of:
CRI $R_a \geq 90$, $R_9 \geq 50$, $G_a \geq 97$, $C_9 \geq 90$
IES TM-30-18 : $R_f \geq 90$, $R_{f,h1} \geq 89$, $R_g \geq 99$, $R_{cs,h1} \geq -5\%$

SPD data available upon request

Fixture to fixture color accuracy within:
3 SDCM for Static White & Tunable White luminaires

Approvals

Certified to UL, IES & CSA Standards.

Select SyncLine configurations contribute toward satisfying features L02, L03, L04, L07, L08, and L09 under the WELL v2 Building Standard®.

Environment

Rated for dry or damp locations in operating ambient temperatures of 0-25°C (32-77°F).

Many luminaire components, such as reflectors, refractors, lenses, and LEDs are made from various types of plastics which can be adversely affected by airborne contaminants. If sulfur-based chemicals, petroleum-based products, cleaning solutions, or other contaminants are expected in the intended area of use, consult factory for compatibility. Damage caused by sulfur, chlorine, petroleum-based solution or other contaminants are not covered under warranty. Not suitable for natatorium environments.

Warranty

Five-year luminaire limited warranty including LED boards and driver:
www.signify.com/warranties

QuickShip

10-day QuickShip available for most configurations upon request. More information available at:
www.signify.com/en-us/brands/ledalite/quickship

SyncLine wall

Wireless Controls Options

Radio only sensor (RA):

- Integral RADIO only sensor simply enables wireless mesh connectivity to the luminaire without any occupancy or daylight sensing.
- Ideal for applications where sensing functionality is managed by other Interact devices and the luminaire only needs to have wireless connectivity.
- Interact Pro includes an App, a portal and a broad portfolio of wireless luminaires, lamps and retrofit kits all working on the same system.
- Startup is implemented via Interact Pro App (Android or iPhone) & Bluetooth connectivity. The App provides flexibility to choose between a gateway or non-gateway mode for setup.
- Setup with the gateway requires wired internet access to the gateway. It is possible to add a gateway at a later point.
- Prepare project configuration steps remotely, identify and group devices together onsite.
- Compatible with UID8451/10 wireless dimmer switch, SWS200 wireless scene switch, wireless Occ sensor (OCC SENSOR IA CM IP42 WH 10/1) and wireless Day/Occ sensor (OCC MULTI SENSOR IA CM WH 10/1).
- For more information on Interact Pro visit: www.interact-lighting.com/interactproscalablesystem

Emergency Options (R):

- Power Sensing (Factory default) – Recommended
- UL924 option requires unswitched power sense line, absence of voltage on the normal circuit triggers luminaire to 100% output.
- Power Interruption Detection (Field option)
- Detects AC power interruption >30ms triggers 90 minute emergency mode with luminaire at 100% output.

Wired Controls Options

Tunable White & BioUp:

- Tunable White & BioUp options are available with Interact Pro wireless or with 2ch 0-10V or DALI-2 (DT6 or DT8) wired drivers. Please enquire about options such as Lutron T Series or DMX control (extended lead times may apply).
- Signify tunable white solutions are designed to help maximize the influence of lighting on your daily life.
- Dynamic behaviors via scheduled lighting recipes mimicking daylight patterns or supporting biorhythms.
- Scene setting via lighting pre-sets based on various combinations of lighting color temperature and intensity.

Interact Pro scalable sensor option codes across Genlyte product lines

	Evokit	Day-Brite	Ledalite	Lightolier
Zigbee + Bluetooth + Sensing	SWZCS	SWZCS	CS	SBA accessory (external)
Zigbee + Bluetooth	RADIO	RADIO	RA	RA
Zigbee + Bluetooth + Sensing + Environmental data	IAOSB	IAOSB	SB	SB
Zigbee + Highbay + Sensing	-	SWZCSH	-	-

SyncLine wall

Functionalities overview

	The three tiers of Interact		
	Standalone	Gateway	Gateway + IoT
Dimming, grouping, and zoning	✓	✓	✓
Bluetooth and ZigBee enabled	✓	✓	✓
Motion sensing and daylight harvesting	✓	✓	✓
Integration with 0-10V and phase dimming fixtures	✓	✓	✓
Code compliance	✓	✓	✓
Granular dimming and dwell time	✓	✓	✓
New Correlated color temperature (CCT) tuning by switch	✓	✓	✓
New Support for sensor-based Tunable White luminaires	✓	✓	✓
Energy reporting and monitoring		✓	✓
Scheduling		✓	✓
Demand response		✓	✓
BMS integration (BACnet)			✓
Floor plan visualization			✓
IoT sensors for wellness			✓
IoT Apps for productivity			✓

Currently supported maximum system size

To be able to design the lighting system correctly for the customer, it is important to know the prime characteristics of the system, its possibilities and limitations.

System level	
Total number of gateways	Unlimited
Total number of devices	200 per network
• luminaires with integrated sensors	150
• smart TLEDS	150
Total number of ZGP devices (sensors and switches)	50
• sensors	30
• switches	50
• zones and groups	64
Group level	
Recommended number of lights	40 (recommended 25)
Number of ZGP devices	5
Number of scenes	16

Interact system architecture for office, education, healthcare, retail, industrial and parking applications

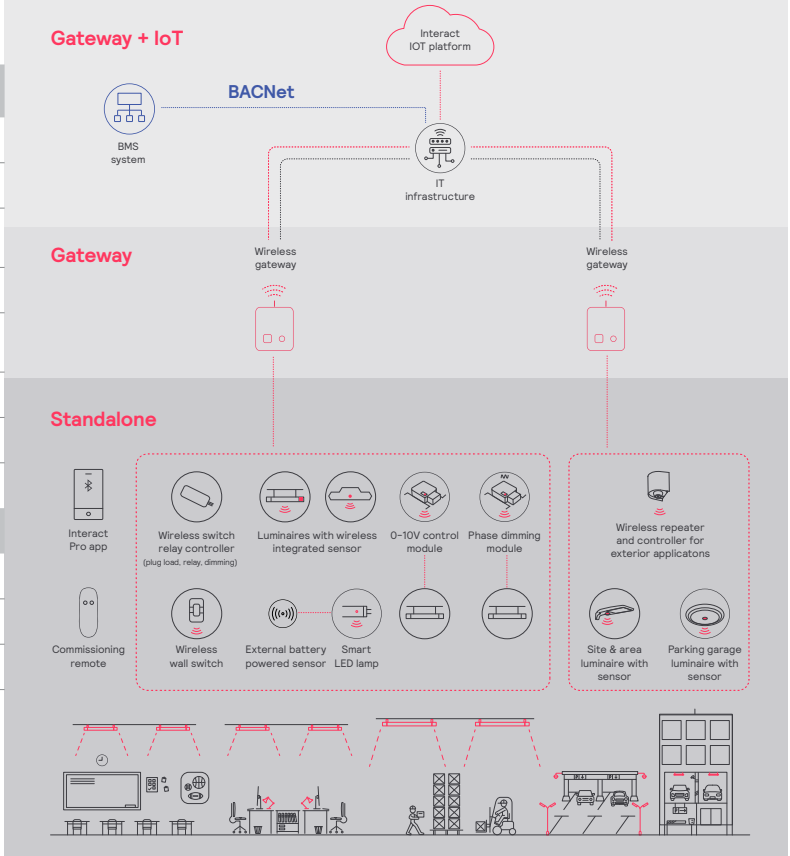

SyncLine wall

Colorimetry

SyncLine (SLxx) BioUp

Nominal CRI &CCT		CRI 90+, 2700K	CRI 90+, 3000K	CRI 80+, 3500K	CRI 80+, 4000K	CRI 80+, 5000K
CIE 013.3-1995 [1]	CRI R_a	94	91	88	86	82
	R_9	62	70	75	76	70
	G_a	100	98	97	95	92
	C_9	94	95	96	96	95
IES TM-30-18 [2]	R_f	92	90	87	84	82
	$R_{f,h1}$	91	90	88	86	83
	R_g	101	98	96	94	92
	$R_{cs,h1}$	-5%	-5%	-5%	-5%	-6%
MDER [3]		0.44	0.59	0.72	0.82	0.97

SyncLine (SLxx) AccuRender Tunable White

Nominal CRI &CCT		CRI 90+, 2700K	CRI 90+, 3000K	CRI 90+, 3500K	CRI 90+, 4000K	CRI 90+, 5000K	CRI 90+, 6500K
CIE 013.3-1995 [1]	CRI R_a	94	94	95	95	92	92
	R_9	54	63	72	76	75	62
	G_a	98	100	100	100	98	95
	C_9	92	94	95	96	95	92
IES TM-30-18 [2]	R_f	92	92	91	91	90	87
	$R_{f,h1}$	90	91	91	91	89	85
	R_g	99	100	100	99	99	96
	$R_{cs,h1}$	-6%	-5%	-4%	-4%	-5%	-6%
MDER [3]		0.45	0.53	0.63	0.71	0.83	0.97

SyncLine (SLxx) AccuRender Static White

Nominal CRI &CCT		CRI 90+, 2700K	CRI 90+, 3000K	CRI 90+, 3500K	CRI 90+, 4000K	CRI 90+, 5000K
CIE 013.3-1995 [1]	CRI R_a	94	93	93	93	93
	R_9	55	57	59	64	68
	G_a	99	99	99	99	99
	C_9	93	93	93	93	94
IES TM-30-18 [2]	R_f	92	91	91	91	90
	$R_{f,h1}$	90	90	90	91	89
	R_g	100	100	99	100	100
	$R_{cs,h1}$	-6%	-5%	-6%	-5%	-5%
MDER [3]		0.45	0.51	0.58	0.65	0.81

1. Color Rendering Index (CRI Ra) and Strong Red (R9) are calculated in accordance with CIE 013.3-1995. Color Gamut index (Ga) and red chroma Index (C9) are CIE based properties using the Global Lighting Association's calculation tool.
2. Fidelity Index (Rf), Red Fidelity Index (Rf,h1), Gamut Index (Rg), and Red Local Chroma Shift (Rcs,h1) are calculated in accordance with IES TM-30-18.
3. Melanopic Daylight Efficacy Ratio (MDER) is the measure for "spectral melanopic efficiency" as defined in CIE S 026-2018.

SyncLine wall

Photometry

Direct (SL21) One Light Engine – AJ (100% Down)

Click “PDF” or “IES” text to download

Nominal CRI &CCT				CRI 90+, 2700K					CRI 90+, 3000K					CRI 90+ [4], 3500K					CRI 90+ [4], 4000K					CRI 90+ [4], 5000K					CRI 90+, 6500K				
Nominal Lumen Package (lm/4ft)			Watts (W)[3]	Flux (lm/4ft)[1]	Efficacy (LPW)[1]	UGR[2]	Photometry Report	IES File	Flux (lm/4ft)[1]	Efficacy (LPW)[1]	UGR[2]	Photometry Report	IES File	Flux (lm/4ft)[1]	Efficacy (LPW)[1]	UGR[2]	Photometry Report	IES File	Flux (lm/4ft)[1]	Efficacy (LPW)[1]	UGR[2]	Photometry Report	IES File	Flux (lm/4ft)[1]	Efficacy (LPW)[1]	UGR[2]	Photometry Report	IES File	Flux (lm/4ft)[1]	Efficacy (LPW)[1]	UGR[2]	Photometry Report	IES File
BioUp	3000	100% DN	35.8	2,998	87.7	25.6	PDF	IES	2,998	85.6	25.6	PDF	IES	2,998	83.8	25.6	PDF	IES	2,998	82.4	25.6	PDF	IES	2,998	80.5	25.6	PDF	IES	-	-	-	-	-
	2000	100% DN	22.2	2,002	93.6	24.2	PDF	IES	2,002	91.8	24.2	PDF	IES	2,002	90.2	24.2	PDF	IES	2,002	89.0	24.2	PDF	IES	2,002	87.2	24.2	PDF	IES	-	-	-	-	-
Tunable White	3000	100% DN	32.4	3,000	89.3	25.6	PDF	IES	3,000	91.0	25.6	PDF	IES	3,000	92.6	25.6	PDF	IES	3,000	93.8	25.6	PDF	IES	3,000	95.7	25.6	PDF	IES	3,000	97.7	25.6	PDF	IES
	2000	100% DN	20.9	2,001	93.1	24.2	PDF	IES	2,001	94.5	24.2	PDF	IES	2,001	95.9	24.2	PDF	IES	2,001	97.1	24.2	PDF	IES	2,001	98.8	24.2	PDF	IES	2,001	100.7	24.2	PDF	IES
Static White	4000	100% DN	42.8	3,679	86.0	26.3	PDF	IES	3,822	89.3	26.5	PDF	IES	3,992	93.3	26.6	PDF	IES	4,003	93.5	26.6	PDF	IES	4,191	97.9	26.8	PDF	IES	-	-	-	-	-
	3000	100% DN	31.5	2,771	88.0	25.3	PDF	IES	2,879	91.4	25.5	PDF	IES	3,000	95.2	25.6	PDF	IES	3,014	95.7	25.6	PDF	IES	3,147	99.9	25.8	PDF	IES	-	-	-	-	-
	2000	100% DN	20.8	1,851	89.0	23.9	PDF	IES	1,921	92.4	24.1	PDF	IES	2,002	96.3	24.2	PDF	IES	2,008	96.5	24.2	PDF	IES	2,097	100.8	24.4	PDF	IES	-	-	-	-	-

1. 4ft Luminaire photometry has been conducted in accordance with IES LM-79-08. IES files can be downloaded by clicking the links in the table above, or online at ledalite.com. Luminaires with finishes other than standard white may result in a drop in flux and efficacy.
2. Unified Glare Ratio (UGR) is calculated in accordance with CIE 117-1995. Reference conditions of 4Hx8Hx1H and reflectances of 70/50/20% have been applied using the procedure described in CIE 190-2010.
3. Input power stated at 3500K. BioUp & Tunable White, stated with Advance FlexTune SR driver & Interact Pro scalable wireless sensor, data may vary with other drivers.
4. BioUp delivers CRI 90+, 2700K-3000K, and CRI 80+, >3000K-5000K.

One Light Engine – AJ (100% Down)
Spacing Criteria: 1.38/1.20

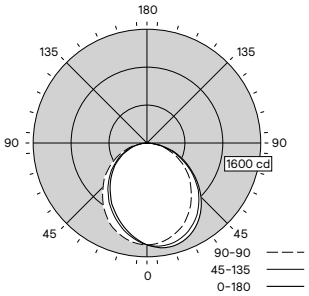

98% Down / 2% Up

Candela plots shown are for 4000lm/4ft, CRI 90, 3500K configurations.

SyncLine wall

Photometry

Indirect (SL23) One Light Engine – NA (100% Up)

Click "PDF" or "IES" text to download

Nominal CRI &CCT				CRI 90+, 2700K					CRI 90+, 3000K					CRI 90+[4], 3500K					CRI 90+[4], 4000K					CRI 90+[4], 5000K					CRI 90+, 6500K				
Nominal Lumen Package (lm/4ft)			Watts (W)[3]	Flux (lm/4ft)[1]	Efficacy (LPW)[1]	UGR[2]	Photometry Report	IES File	Flux (lm/4ft)[1]	Efficacy (LPW)[1]	UGR[2]	Photometry Report	IES File	Flux (lm/4ft)[1]	Efficacy (LPW)[1]	UGR[2]	Photometry Report	IES File	Flux (lm/4ft)[1]	Efficacy (LPW)[1]	UGR[2]	Photometry Report	IES File	Flux (lm/4ft)[1]	Efficacy (LPW)[1]	UGR[2]	Photometry Report	IES File	Flux (lm/4ft)[1]	Efficacy (LPW)[1]	UGR[2]	Photometry Report	IES File
BioUp	4000	100% UP	36.5	3,997	114.9	N/A	PDF	IES	3,997	111.9	N/A	PDF	IES	3,997	109.4	N/A	PDF	IES	3,997	107.5	N/A	PDF	IES	3,997	104.9	N/A	PDF	IES	-	-	-	-	-
BioUp	3000	100% UP	25.8	3,002	121.0	N/A	PDF	IES	3,002	118.5	N/A	PDF	IES	3,002	116.3	N/A	PDF	IES	3,002	114.6	N/A	PDF	IES	3,002	112.2	N/A	PDF	IES	-	-	-	-	-
Tunable White	4000	100% UP	33.2	4,000	117.0	N/A	PDF	IES	4,000	118.3	N/A	PDF	IES	4,000	120.3	N/A	PDF	IES	4,000	122.0	N/A	PDF	IES	4,000	124.8	N/A	PDF	IES	4,000	127.9	N/A	PDF	IES
Tunable White	3000	100% UP	24.2	3,001	120.5	N/A	PDF	IES	3,001	122.1	N/A	PDF	IES	3,001	124.0	N/A	PDF	IES	3,001	125.7	N/A	PDF	IES	3,001	128.3	N/A	PDF	IES	3,001	131.4	N/A	PDF	IES
Static White	7000	100% UP	59.5	6,441	108.3	N/A	PDF	IES	6,680	112.3	N/A	PDF	IES	6,997	117.6	N/A	PDF	IES	7,025	118.1	N/A	PDF	IES	7,349	123.5	N/A	PDF	IES	-	-	-	-	-
Static White	6000	100% UP	49.6	5,524	111.4	N/A	PDF	IES	5,736	115.6	N/A	PDF	IES	6,000	121.0	N/A	PDF	IES	6,013	121.2	N/A	PDF	IES	6,301	127.0	N/A	PDF	IES	-	-	-	-	-
Static White	5000	100% UP	40.5	4,600	113.6	N/A	PDF	IES	4,779	118.0	N/A	PDF	IES	4,989	123.2	N/A	PDF	IES	5,005	123.6	N/A	PDF	IES	5,237	129.3	N/A	PDF	IES	-	-	-	-	-
Static White	4000	100% UP	32.1	3,698	115.2	N/A	PDF	IES	3,842	119.7	N/A	PDF	IES	4,005	124.8	N/A	PDF	IES	4,022	125.3	N/A	PDF	IES	4,201	130.9	N/A	PDF	IES	-	-	-	-	-
Static White	3000	100% UP	24.3	2,784	114.6	N/A	PDF	IES	2,891	119.0	N/A	PDF	IES	3,012	124.0	N/A	PDF	IES	3,023	124.4	N/A	PDF	IES	3,156	129.9	N/A	PDF	IES	-	-	-	-	-
Static White	2000	100% UP	16.2	1,838	113.5	N/A	PDF	IES	1,907	117.7	N/A	PDF	IES	1,990	122.8	N/A	PDF	IES	1,990	122.8	N/A	PDF	IES	2,083	128.6	N/A	PDF	IES	-	-	-	-	-

Indirect (SL23) One Light Engine – NB (100% Up)

Click "PDF" or "IES" text to download

Nominal CRI &CCT				CRI 90+, 2700K					CRI 90+, 3000K					CRI 90+, 3500K					CRI 90+, 4000K					CRI 90+, 5000K				
Nominal Lumen Package (lm/4ft)			Watts (W)[3]	Flux (lm/4ft)[1]	Efficacy (LPW)[1]	UGR[2]	Photometry Report	IES File	Flux (lm/4ft)[1]	Efficacy (LPW)[1]	UGR[2]	Photometry Report	IES File	Flux (lm/4ft)[1]	Efficacy (LPW)[1]	UGR[2]	Photometry Report	IES File	Flux (lm/4ft)[1]	Efficacy (LPW)[1]	UGR[2]	Photometry Report	IES File	Flux (lm/4ft)[1]	Efficacy (LPW)[1]	UGR[2]	Photometry Report	IES File
Static White	7000	100% UP	59.5	6,964	117.0	N/A	PDF	IES	7,222	121.4	N/A	PDF	IES	7,565	127.1	N/A	PDF	IES	7,595	127.6	N/A	PDF	IES	7,945	133.5	N/A	PDF	IES
Static White	6000	100% UP	49.6	5,972	120.4	N/A	PDF	IES	6,201	125.0	N/A	PDF	IES	6,487	130.8	N/A	PDF	IES	6,501	131.1	N/A	PDF	IES	6,812	137.3	N/A	PDF	IES
Static White	5000	100% UP	40.5	4,973	122.8	N/A	PDF	IES	5,167	127.6	N/A	PDF	IES	5,394	133.2	N/A	PDF	IES	5,411	133.6	N/A	PDF	IES	5,662	139.8	N/A	PDF	IES
Static White	4000	100% UP	32.1	3,998	124.5	N/A	PDF	IES	4,153	129.4	N/A	PDF	IES	4,329	134.9	N/A	PDF	IES	4,349	135.5	N/A	PDF	IES	4,542	141.5	N/A	PDF	IES
Static White	3000	100% UP	24.3	3,010	123.9	N/A	PDF	IES	3,125	128.6	N/A	PDF	IES	3,256	134.0	N/A	PDF	IES	3,269	134.5	N/A	PDF	IES	3,412	140.4	N/A	PDF	IES
Static White	2000	100% UP	16.2	1,988	122.7	N/A	PDF	IES	2,062	127.3	N/A	PDF	IES	2,151	132.8	N/A	PDF	IES	2,152	132.8	N/A	PDF	IES	2,252	139.0	N/A	PDF	IES

1. 4ft Luminaire photometry has been conducted in accordance with IES LM-79-08. IES files can be downloaded by clicking the links in the table above, or online at ledalite.com. Luminaires with finishes other than standard white may result in a drop in flux and efficacy.
2. Unified Glare Ratio (UGR) is calculated in accordance with CIE 117-1995. Reference conditions of 4Hx8Hx1H and reflectances of 70/50/20% have been applied using the procedure described in CIE 190-2010.
3. Input power stated at 3500K. BioUp & Tunable White, stated with Advance FlexTune SR driver & Interact Pro scalable wireless sensor, data may vary with other drivers.
4. BioUp delivers CRI 90+, 2700K-3000K, and CRI 80+, >3000K-5000K.

One Light Engine – NA (100% Up)

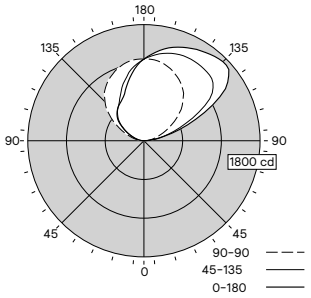

0% Down / 100% Up

One Light Engine – NB (100% Up)

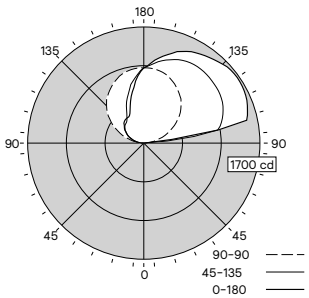

0% Down / 100% Up

Candela plots shown are for 4000lm/4ft, CRI 90, 3500K configurations.

SyncLine wall

Photometry

Direct/Indirect (SL26) One Light Engine – AA (30% Down/70% Up)

Click "PDF" or "IES" text to download

Nominal CRI &CCT				CRI 90+, 2700K					CRI 90+, 3000K					CRI 90+ [4], 3500K					CRI 90+ [4], 4000K					CRI 90+ [4], 5000K					CRI 90+, 6500K				
Nominal Lumen Package (lm/4ft)			Watts (W)[3]	Flux (lm/4ft)[1]	Efficacy (LPW)[1]	UGR[2]	Photometry Report	IES File	Flux (lm/4ft)[1]	Efficacy (LPW)[1]	UGR[2]	Photometry Report	IES File	Flux (lm/4ft)[1]	Efficacy (LPW)[1]	UGR[2]	Photometry Report	IES File	Flux (lm/4ft)[1]	Efficacy (LPW)[1]	UGR[2]	Photometry Report	IES File	Flux (lm/4ft)[1]	Efficacy (LPW)[1]	UGR[2]	Photometry Report	IES File	Flux (lm/4ft)[1]	Efficacy (LPW)[1]	UGR[2]	Photometry Report	IES File
BioUp	4000	30% DN/ 70% UP	35.4	3,997	118.3	17.0	PDF	IES	3,997	115.3	17.0	PDF	IES	3,997	112.8	17.0	PDF	IES	3,997	111.0	17.0	PDF	IES	3,997	108.3	17.0	PDF	IES	-	-	-	-	-
BioUp	3000	30% DN/ 70% UP	25.1	3,003	124.6	16.0	PDF	IES	3,003	121.8	16.0	PDF	IES	3,003	119.5	16.0	PDF	IES	3,003	117.8	16.0	PDF	IES	3,003	115.4	16.0	PDF	IES	-	-	-	-	-
Tunable White	4000	30% DN/ 70% UP	32.4	4,000	120.1	17.0	PDF	IES	4,000	121.5	17.0	PDF	IES	4,000	123.6	17.0	PDF	IES	4,000	125.4	17.0	PDF	IES	4,000	128.3	17.0	PDF	IES	4,000	131.5	17.0	PDF	IES
Tunable White	3000	30% DN/ 70% UP	23.6	3,001	124.0	16.0	PDF	IES	3,001	125.4	16.0	PDF	IES	3,001	127.3	16.0	PDF	IES	3,001	128.9	16.0	PDF	IES	3,001	131.6	16.0	PDF	IES	3,001	134.6	16.0	PDF	IES
Static White	7000	30% DN/ 70% UP	57.8	6,444	111.5	18.7	PDF	IES	6,685	115.7	18.8	PDF	IES	7,002	121.1	19.0	PDF	IES	7,025	121.5	19.0	PDF	IES	7,353	127.2	19.1	PDF	IES	-	-	-	-	-
Static White	6000	30% DN/ 70% UP	48.2	5,516	114.4	18.1	PDF	IES	5,729	118.9	18.3	PDF	IES	5,991	124.3	18.4	PDF	IES	6,005	124.6	18.4	PDF	IES	6,292	130.5	18.6	PDF	IES	-	-	-	-	-
Static White	5000	30% DN/ 70% UP	39.5	4,606	116.6	17.5	PDF	IES	4,785	121.1	17.6	PDF	IES	4,995	126.5	17.8	PDF	IES	5,012	126.9	17.8	PDF	IES	5,243	132.7	18.0	PDF	IES	-	-	-	-	-
Static White	4000	30% DN/ 70% UP	31.3	3,700	118.2	16.7	PDF	IES	3,844	122.8	16.9	PDF	IES	4,006	128.0	17.0	PDF	IES	4,024	128.6	17.0	PDF	IES	4,202	134.2	17.2	PDF	IES	-	-	-	-	-
Static White	3000	30% DN/ 70% UP	23.8	2,783	116.9	15.8	PDF	IES	2,890	121.4	15.9	PDF	IES	3,011	126.5	16.0	PDF	IES	3,022	127.0	16.0	PDF	IES	3,155	132.6	16.2	PDF	IES	-	-	-	-	-
Static White	2000	30% DN/ 70% UP	15.8	1,836	116.2	14.3	PDF	IES	1,905	120.6	14.4	PDF	IES	1,987	125.8	14.6	PDF	IES	1,987	125.8	14.6	PDF	IES	2,080	131.6	14.7	PDF	IES	-	-	-	-	-

Direct/Indirect (SL26) One Light Engine – AB (20% Down/80% Up)

Click "PDF" or "IES" text to download

Nominal CRI &CCT				CRI 90+, 2700K					CRI 90+, 3000K					CRI 90+, 3500K					CRI 90+, 4000K					CRI 90+, 5000K				
Nominal Lumen Package (lm/4ft)			Watts (W)[3]	Flux (lm/4ft)[1]	Efficacy (LPW)[1]	UGR[2]	Photometry Report	IES File	Flux (lm/4ft)[1]	Efficacy (LPW)[1]	UGR[2]	Photometry Report	IES File	Flux (lm/4ft)[1]	Efficacy (LPW)[1]	UGR[2]	Photometry Report	IES File	Flux (lm/4ft)[1]	Efficacy (LPW)[1]	UGR[2]	Photometry Report	IES File	Flux (lm/4ft)[1]	Efficacy (LPW)[1]	UGR[2]	Photometry Report	IES File
Static White	7000	20% DN/ 80% UP	57.8	6,630	114.7	15.8	PDF	IES	6,878	119.0	15.9	PDF	IES	7,203	124.6	16.1	PDF	IES	7,227	125.0	16.1	PDF	IES	7,565	130.9	16.2	PDF	IES
Static White	6000	20% DN/ 80% UP	48.2	5,675	117.7	15.2	PDF	IES	5,894	122.3	15.4	PDF	IES	6,164	127.9	15.5	PDF	IES	6,178	128.2	15.5	PDF	IES	6,473	134.3	15.7	PDF	IES
Static White	5000	20% DN/ 80% UP	39.5	4,739	120.0	14.6	PDF	IES	4,923	124.6	14.7	PDF	IES	5,138	130.1	14.9	PDF	IES	5,156	130.5	14.9	PDF	IES	5,394	136.6	15.1	PDF	IES
Static White	4000	20% DN/ 80% UP	31.3	3,807	121.6	13.9	PDF	IES	3,954	126.3	14.0	PDF	IES	4,121	131.7	14.1	PDF	IES	4,140	132.3	14.1	PDF	IES	4,323	138.1	14.3	PDF	IES
Static White	3000	20% DN/ 80% UP	23.8	2,863	120.3	12.9	PDF	IES	2,973	124.9	13.0	PDF	IES	3,098	130.2	13.1	PDF	IES	3,109	130.6	13.1	PDF	IES	3,246	136.4	13.3	PDF	IES
Static White	2000	20% DN/ 80% UP	15.8	1,889	119.6	11.4	PDF	IES	1,960	124.1	11.5	PDF	IES	2,044	129.4	11.7	PDF	IES	2,045	129.4	11.7	PDF	IES	2,140	135.4	11.8	PDF	IES

1. 4ft Luminaire photometry has been conducted in accordance with IES LM-79-08. IES files can be downloaded by clicking the links in the table above, or online at ledalite.com. Luminaires with finishes other than standard white may result in a drop in flux and efficacy.
2. Unified Glare Ratio (UGR) is calculated in accordance with CIE 117-1995. Reference conditions of 4Hx8Hx1H and reflectances of 70/50/20% have been applied using the procedure described in CIE 190-2010.
3. Input power stated at 3500K. BioUp & Tunable White, stated with Advance FlexTune SR driver & Interact Pro scalable wireless sensor, data may vary with other drivers.
4. BioUp delivers CRI 90+, 2700K-3000K, and CRI 80+, >3000K-5000K.

One Light Engine – AA (30% Down/%70 Up)
Spacing Criteria: 1.63/1.28

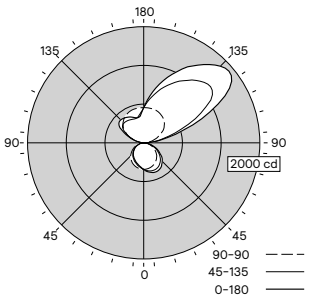

29% Down / 71% Up

One Light Engine – AB (20% Down/%80 Up)
Spacing Criteria: 1.74/1.28

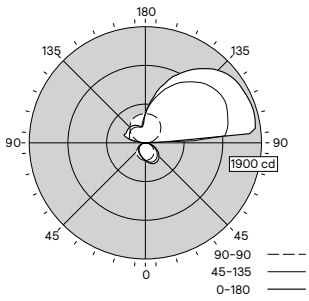

18% Down / 82% Up

Candela plots shown are for 5000lm/4ft, CRI 90, 3500K configurations.

SyncLine wall

Photometry

Direct/Indirect (SL26) One Light Engine – AD (50% Down/50% Up)

Click "PDF" or "IES" text to download

Nominal CRI &CCT				CRI 90+, 2700K					CRI 90+, 3000K					CRI 90+ [4], 3500K					CRI 90+ [4], 4000K					CRI 90+ [4], 5000K					CRI 90+, 6500K				
Nominal Lumen Package (lm/4ft)			Watts (W)[3]	Flux (lm/4ft)[1]	Efficacy (LPW)[1]	UGR[2]	Photometry Report	IES File	Flux (lm/4ft)[1]	Efficacy (LPW)[1]	UGR[2]	Photometry Report	IES File	Flux (lm/4ft)[1]	Efficacy (LPW)[1]	UGR[2]	Photometry Report	IES File	Flux (lm/4ft)[1]	Efficacy (LPW)[1]	UGR[2]	Photometry Report	IES File	Flux (lm/4ft)[1]	Efficacy (LPW)[1]	UGR[2]	Photometry Report	IES File	Flux (lm/4ft)[1]	Efficacy (LPW)[1]	UGR[2]	Photometry Report	IES File
BioUp	4000	50% DN/ 50% UP	36.0	3,997	116.5	20.7	PDF	IES	3,997	113.6	20.7	PDF	IES	3,997	111.1	20.7	PDF	IES	3,997	109.3	20.7	PDF	IES	3,997	106.6	20.7	PDF	IES	-	-	-	-	-
	3000	50% DN/ 50% UP	25.5	3,003	123.1	19.7	PDF	IES	3,003	120.2	19.7	PDF	IES	3,003	117.9	19.7	PDF	IES	3,003	116.2	19.7	PDF	IES	3,003	113.8	19.7	PDF	IES	-	-	-	-	-
Tunable White	4000	50% DN/ 50% UP	32.8	4,000	118.3	20.7	PDF	IES	4,000	119.9	20.7	PDF	IES	4,000	122.0	20.7	PDF	IES	4,000	123.7	20.7	PDF	IES	4,000	126.6	20.7	PDF	IES	4,000	129.8	20.7	PDF	IES
	3000	50% DN/ 50% UP	23.9	3,000	122.4	19.7	PDF	IES	3,000	123.7	19.7	PDF	IES	3,000	125.7	19.7	PDF	IES	3,000	127.3	19.7	PDF	IES	3,000	129.9	19.7	PDF	IES	3,000	132.9	19.7	PDF	IES
Static White	7000	50% DN/ 50% UP	58.6	6,444	110.0	22.4	PDF	IES	6,684	114.1	22.5	PDF	IES	7,001	119.5	22.7	PDF	IES	7,026	119.9	22.7	PDF	IES	7,352	125.5	22.8	PDF	IES	-	-	-	-	-
	6000	50% DN/ 50% UP	49.0	5,531	112.9	21.8	PDF	IES	5,744	117.2	22.0	PDF	IES	6,008	122.6	22.1	PDF	IES	6,021	122.9	22.1	PDF	IES	6,309	128.8	22.3	PDF	IES	-	-	-	-	-
	5000	50% DN/ 50% UP	40.1	4,614	115.1	21.2	PDF	IES	4,794	119.6	21.3	PDF	IES	5,004	124.8	21.5	PDF	IES	5,021	125.2	21.5	PDF	IES	5,253	131.0	21.7	PDF	IES	-	-	-	-	-
	4000	50% DN/ 50% UP	31.7	3,700	116.7	20.4	PDF	IES	3,843	121.2	20.6	PDF	IES	4,006	126.4	20.7	PDF	IES	4,024	126.9	20.7	PDF	IES	4,202	132.6	20.9	PDF	IES	-	-	-	-	-
	3000	50% DN/ 50% UP	24.0	2,773	115.5	19.4	PDF	IES	2,879	120.0	19.6	PDF	IES	3,000	125.0	19.7	PDF	IES	3,011	125.5	19.7	PDF	IES	3,143	131.0	19.9	PDF	IES	-	-	-	-	-
	2000	50% DN/ 50% UP	16.0	1,838	114.9	18.0	PDF	IES	1,906	119.1	18.1	PDF	IES	1,989	124.3	18.3	PDF	IES	1,989	124.3	18.3	PDF	IES	2,082	130.1	18.4	PDF	IES	-	-	-	-	-

Direct/Indirect (SL26) One Light Engine – AE (40% Down/60% Up)

Click "PDF" or "IES" text to download

Nominal CRI &CCT				CRI 90+, 2700K					CRI 90+, 3000K					CRI 90+, 3500K					CRI 90+, 4000K					CRI 90+, 5000K				
Nominal Lumen Package (lm/4ft)			Watts (W)[3]	Flux (lm/4ft)[1]	Efficacy (LPW)[1]	UGR[2]	Photometry Report	IES File	Flux (lm/4ft)[1]	Efficacy (LPW)[1]	UGR[2]	Photometry Report	IES File	Flux (lm/4ft)[1]	Efficacy (LPW)[1]	UGR[2]	Photometry Report	IES File	Flux (lm/4ft)[1]	Efficacy (LPW)[1]	UGR[2]	Photometry Report	IES File	Flux (lm/4ft)[1]	Efficacy (LPW)[1]	UGR[2]	Photometry Report	IES File
Static White	7000	40% DN/ 60% UP	58.6	6,746	115.1	20.9	PDF	IES	6,997	119.4	21.1	PDF	IES	7,329	125.1	21.2	PDF	IES	7,356	125.5	21.2	PDF	IES	7,697	131.3	21.4	PDF	IES
	6000	40% DN/ 60% UP	49.0	5,791	118.2	20.4	PDF	IES	6,014	122.7	20.5	PDF	IES	6,290	128.4	20.7	PDF	IES	6,303	128.6	20.7	PDF	IES	6,605	134.8	20.9	PDF	IES
	5000	40% DN/ 60% UP	40.1	4,831	120.5	19.8	PDF	IES	5,019	125.2	19.9	PDF	IES	5,239	130.6	20.1	PDF	IES	5,256	131.1	20.1	PDF	IES	5,499	137.1	20.2	PDF	IES
	4000	40% DN/ 60% UP	31.7	3,873	122.2	19.0	PDF	IES	4,024	126.9	19.1	PDF	IES	4,194	132.3	19.3	PDF	IES	4,212	132.9	19.3	PDF	IES	4,399	138.8	19.5	PDF	IES
	3000	40% DN/ 60% UP	24.0	2,903	121.0	18.0	PDF	IES	3,014	125.6	18.1	PDF	IES	3,140	130.8	18.3	PDF	IES	3,152	131.3	18.3	PDF	IES	3,291	137.1	18.4	PDF	IES
	2000	40% DN/ 60% UP	16.0	1,924	120.3	16.6	PDF	IES	1,996	124.8	16.7	PDF	IES	2,082	130.1	16.9	PDF	IES	2,082	130.1	16.9	PDF	IES	2,179	136.2	17.0	PDF	IES

1. 4ft Luminaire photometry has been conducted in accordance with IES LM-79-08. IES files can be downloaded by clicking the links in the table above, or online at ledalite.com. Luminaires with finishes other than standard white may result in a drop in flux and efficacy.
2. Unified Glare Ratio (UGR) is calculated in accordance with CIE 117-1995. Reference conditions of 4Hx8Hx1H and reflectances of 70/50/20% have been applied using the procedure described in CIE 190-2010.
3. Input power stated at 3500K. BioUp & Tunable White, stated with Advance FlexTune SR driver & Interact Pro scalable wireless sensor, data may vary with other drivers.
4. BioUp delivers CRI 90+, 2700K-3000K, and CRI 80+, >3000K-5000K.

One Light Engine – AD (50% Down/%50 Up)
Spacing Criteria: 1.52/1.24

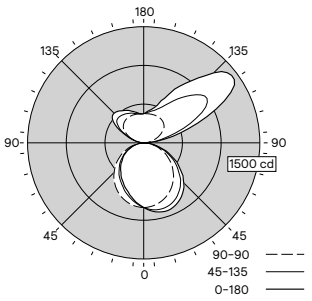

48% Down / 52% Up

One Light Engine – AE (40% Down/%60 Up)
Spacing Criteria: 1.57/1.23

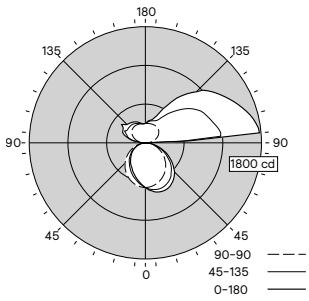

38% Down / 62% Up

Candela plots shown are for 5000lm/4ft, CRI 90, 3500K configurations.

SyncLine wall

Photometry

Direct/Indirect (SL26) One Light Engine – AG (80% Down/20% Up)

Click “PDF” or “IES” text to download

Nominal CRI &CCT				CRI 90+, 2700K					CRI 90+, 3000K					CRI 90+ [4], 3500K					CRI 90+ [4], 4000K					CRI 90+ [4], 5000K					CRI 90+, 6500K				
Nominal Lumen Package (lm/4ft)			Watts (W)[3]	Flux (lm/4ft)[1]	Efficacy (LPW)[1]	UGR[2]	Photometry Report	IES File	Flux (lm/4ft)[1]	Efficacy (LPW)[1]	UGR[2]	Photometry Report	IES File	Flux (lm/4ft)[1]	Efficacy (LPW)[1]	UGR[2]	Photometry Report	IES File	Flux (lm/4ft)[1]	Efficacy (LPW)[1]	UGR[2]	Photometry Report	IES File	Flux (lm/4ft)[1]	Efficacy (LPW)[1]	UGR[2]	Photometry Report	IES File	Flux (lm/4ft)[1]	Efficacy (LPW)[1]	UGR[2]	Photometry Report	IES File
BioUp	3000	80% DN/ 20% UP	29.4	3,001	106.8	23.7	PDF	IES	3,001	104.3	23.7	PDF	IES	3,001	102.2	23.7	PDF	IES	3,001	100.7	23.7	PDF	IES	3,001	98.4	23.7	PDF	IES	-	-	-	-	-
BioUp	2000	80% DN/ 20% UP	18.7	2,004	111.3	22.3	PDF	IES	2,004	109.2	22.3	PDF	IES	2,004	107.4	22.3	PDF	IES	2,004	106.0	22.3	PDF	IES	2,004	104.1	22.3	PDF	IES	-	-	-	-	-
Tunable White	4000	80% DN/ 20% UP	37.7	3,999	102.8	24.7	PDF	IES	3,999	104.1	24.7	PDF	IES	3,999	105.9	24.7	PDF	IES	3,999	107.5	24.7	PDF	IES	3,999	110.1	24.7	PDF	IES	3,999	113.0	24.7	PDF	IES
Tunable White	3000	80% DN/ 20% UP	27.3	3,001	107.2	23.7	PDF	IES	3,001	108.3	23.7	PDF	IES	3,001	110.1	23.7	PDF	IES	3,001	111.6	23.7	PDF	IES	3,001	114.0	23.7	PDF	IES	3,001	116.8	23.7	PDF	IES
Static White	5000	80% DN/ 20% UP	45.6	4,611	101.1	25.2	PDF	IES	4,790	105.0	25.3	PDF	IES	5,006	109.8	25.5	PDF	IES	5,018	110.0	25.5	PDF	IES	5,257	115.3	25.7	PDF	IES	-	-	-	-	-
Static White	4000	80% DN/ 20% UP	35.9	3,693	102.9	24.4	PDF	IES	3,836	106.9	24.6	PDF	IES	4,001	111.4	24.7	PDF	IES	4,017	111.9	24.7	PDF	IES	4,199	117.0	24.9	PDF	IES	-	-	-	-	-
Static White	3000	80% DN/ 20% UP	26.9	2,770	103.0	23.4	PDF	IES	2,877	107.0	23.6	PDF	IES	2,997	111.4	23.7	PDF	IES	3,010	111.9	23.7	PDF	IES	3,142	116.8	23.9	PDF	IES	-	-	-	-	-
Static White	2000	80% DN/ 20% UP	17.9	1,851	103.4	22.0	PDF	IES	1,921	107.3	22.2	PDF	IES	2,003	111.9	22.3	PDF	IES	2,006	112.1	22.3	PDF	IES	2,097	117.2	22.5	PDF	IES	-	-	-	-	-

1. 4ft Luminaire photometry has been conducted in accordance with IES LM-79-08. IES files can be downloaded by clicking the links in the table above, or online at ledalite.com. Luminaires with finishes other than standard white may result in a drop in flux and efficacy.
2. Unified Glare Ratio (UGR) is calculated in accordance with CIE 117-1995. Reference conditions of 4Hx8Hx1H and reflectances of 70/50/20% have been applied using the procedure described in CIE 190-2010.
3. Input power stated at 3500K. BioUp & Tunable White, stated with Advance FlexTune SR driver & Interact Pro scalable wireless sensor, data may vary with other drivers.
4. BioUp delivers CRI 90+, 2700K-3000K, and CRI 80+, >3000K-5000K

One Light Engine – AG (80% Down/%20 Up)
Spacing Criteria: 1.39/1.21

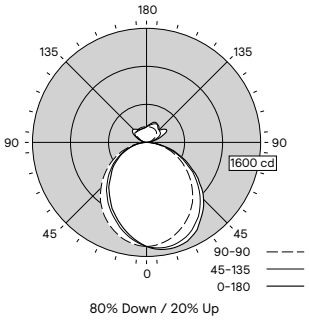

Candela plots shown are for 5000lm/4ft, CRI 90, 3500K configurations.

SyncLine wall

Photometry

Direct/Indirect (SL36) Two Light Engines – AN

Click "PDF" or "IES" text to download

Nominal CRI &CCT				CRI 90+, 2700K					CRI 90+, 3000K					CRI 90+, 3500K					CRI 90+, 4000K					CRI 90+, 5000K					CRI 90+, 6500K				
Nominal Lumen Package (lm/4ft)			Watts (W)[3]	Flux (lm/4ft)[1]	Efficacy (LPW)[1]	UGR[2]	Photometry Report	IES File	Flux (lm/4ft)[1]	Efficacy (LPW)[1]	UGR[2]	Photometry Report	IES File	Flux (lm/4ft)[1]	Efficacy (LPW)[1]	UGR[2]	Photometry Report	IES File	Flux (lm/4ft)[1]	Efficacy (LPW)[1]	UGR[2]	Photometry Report	IES File	Flux (lm/4ft)[1]	Efficacy (LPW)[1]	UGR[2]	Photometry Report	IES File	Flux (lm/4ft)[1]	Efficacy (LPW)[1]	UGR[2]	Photometry Report	IES File
Direct		Indirect																															
BioUp	3000	4000	72.3	6,995	101.4	21.0	PDF	IES	6,995	98.9	21.0	PDF	IES	6,995	96.7	21.0	PDF	IES	6,995	95.1	21.0	PDF	IES	6,995	92.8	21.0	PDF	IES	-	-	-	-	-
		3000	61.6	6,000	101.9	21.6	PDF	IES	6,000	99.4	21.6	PDF	IES	6,000	97.4	21.6	PDF	IES	6,000	95.9	21.6	PDF	IES	6,000	93.8	21.6	PDF	IES	-	-	-	-	-
	2500	4000	65.2	6,499	104.3	19.8	PDF	IES	6,499	101.8	19.8	PDF	IES	6,499	99.7	19.8	PDF	IES	6,499	98.2	19.8	PDF	IES	6,499	95.9	19.8	PDF	IES	-	-	-	-	-
		3000	54.5	5,503	105.4	20.5	PDF	IES	5,503	103.0	20.5	PDF	IES	5,503	101.0	20.5	PDF	IES	5,503	99.6	20.5	PDF	IES	5,503	97.5	20.5	PDF	IES	-	-	-	-	-
	2000	4000	58.7	6,000	106.8	18.4	PDF	IES	6,000	104.3	18.4	PDF	IES	6,000	102.2	18.4	PDF	IES	6,000	100.6	18.4	PDF	IES	6,000	98.4	18.4	PDF	IES	-	-	-	-	-
		3000	48.0	5,004	108.5	19.2	PDF	IES	5,004	106.2	19.2	PDF	IES	5,004	104.2	19.2	PDF	IES	5,004	102.8	19.2	PDF	IES	5,004	100.7	19.2	PDF	IES	-	-	-	-	-
Tunable White	3000	4000	65.7	7,000	103.2	21.0	PDF	IES	7,000	104.8	21.0	PDF	IES	7,000	106.6	21.0	PDF	IES	7,000	108.1	21.0	PDF	IES	7,000	110.4	21.0	PDF	IES	7,000	113.0	21.0	PDF	IES
		3000	56.6	6,001	102.6	21.6	PDF	IES	6,001	104.3	21.6	PDF	IES	6,001	106.0	21.6	PDF	IES	6,001	107.4	21.6	PDF	IES	6,001	109.6	21.6	PDF	IES	6,001	112.1	21.6	PDF	IES
	2500	4000	59.7	6,501	105.5	19.8	PDF	IES	6,501	107.1	19.8	PDF	IES	6,501	108.9	19.8	PDF	IES	6,501	110.3	19.8	PDF	IES	6,501	112.7	19.8	PDF	IES	6,501	115.3	19.8	PDF	IES
		3000	50.7	5,502	105.2	20.5	PDF	IES	5,502	106.8	20.5	PDF	IES	5,502	108.6	20.5	PDF	IES	5,502	110.0	20.5	PDF	IES	5,502	112.2	20.5	PDF	IES	5,502	114.7	20.5	PDF	IES
	2000	4000	54.1	6,001	107.5	18.4	PDF	IES	6,001	109.1	18.4	PDF	IES	6,001	110.9	18.4	PDF	IES	6,001	112.4	18.4	PDF	IES	6,001	114.7	18.4	PDF	IES	6,001	117.3	18.4	PDF	IES
		3000	45.1	5,002	107.8	19.2	PDF	IES	5,002	109.3	19.2	PDF	IES	5,002	111.0	19.2	PDF	IES	5,002	112.4	19.2	PDF	IES	5,002	114.6	19.2	PDF	IES	5,002	117.1	19.2	PDF	IES
Static White	4000	7000	102.3	10,643	104.0	20.7	PDF	IES	11,044	108.0	20.9	PDF	IES	11,557	113.0	21.0	PDF	IES	11,598	113.4	21.0	PDF	IES	12,136	118.6	21.2	PDF	IES	-	-	-	-	-
		6000	92.4	9,651	104.4	21.1	PDF	IES	10,023	108.5	21.2	PDF	IES	10,479	113.4	21.4	PDF	IES	10,504	113.7	21.4	PDF	IES	11,003	119.1	21.5	PDF	IES	-	-	-	-	-
		5000	83.4	8,652	103.7	21.6	PDF	IES	8,989	107.8	21.7	PDF	IES	9,385	112.5	21.9	PDF	IES	9,415	112.9	21.9	PDF	IES	9,853	118.1	22.1	PDF	IES	-	-	-	-	-
		4000	74.8	7,677	102.6	22.2	PDF	IES	7,975	106.6	22.3	PDF	IES	8,321	111.2	22.5	PDF	IES	8,352	111.7	22.5	PDF	IES	8,733	116.8	22.6	PDF	IES	-	-	-	-	-
		3000	66.8	6,689	100.1	22.8	PDF	IES	6,947	104.0	22.9	PDF	IES	7,248	108.5	23.1	PDF	IES	7,272	108.9	23.1	PDF	IES	7,603	113.8	23.3	PDF	IES	-	-	-	-	-
		2000	58.6	5,666	96.7	23.6	PDF	IES	5,884	100.4	23.8	PDF	IES	6,143	104.8	23.9	PDF	IES	6,155	105.0	23.9	PDF	IES	6,443	109.9	24.1	PDF	IES	-	-	-	-	-
		1000	51.7	4,665	90.2	24.8	PDF	IES	4,842	93.7	24.9	PDF	IES	5,059	97.9	25.0	PDF	IES	5,065	98.0	25.0	PDF	IES	5,308	102.7	25.2	PDF	IES	-	-	-	-	-
	3500	7000	96.4	10,187	105.7	19.9	PDF	IES	10,570	109.6	20.0	PDF	IES	11,058	114.7	20.2	PDF	IES	11,102	115.2	20.2	PDF	IES	11,611	120.4	20.3	PDF	IES	-	-	-	-	-
		6000	86.6	9,195	106.2	20.3	PDF	IES	9,550	110.3	20.4	PDF	IES	9,980	115.2	20.6	PDF	IES	10,008	115.6	20.6	PDF	IES	10,479	121.0	20.8	PDF	IES	-	-	-	-	-
		5000	77.5	8,196	105.8	20.8	PDF	IES	8,515	109.9	20.9	PDF	IES	8,887	114.7	21.1	PDF	IES	8,918	115.1	21.1	PDF	IES	9,328	120.4	21.3	PDF	IES	-	-	-	-	-
		4000	68.9	7,221	104.8	21.4	PDF	IES	7,502	108.9	21.5	PDF	IES	7,822	113.5	21.7	PDF	IES	7,855	114.0	21.7	PDF	IES	8,208	119.1	21.8	PDF	IES	-	-	-	-	-
		3000	61.1	6,233	102.0	22.1	PDF	IES	6,474	106.0	22.2	PDF	IES	6,749	110.5	22.3	PDF	IES	6,775	110.9	22.4	PDF	IES	7,078	115.8	22.5	PDF	IES	-	-	-	-	-
		2000	52.7	5,211	98.9	22.9	PDF	IES	5,410	102.7	23.1	PDF	IES	5,644	107.1	23.2	PDF	IES	5,658	107.4	23.2	PDF	IES	5,918	112.3	23.4	PDF	IES	-	-	-	-	-
		1000	46.1	4,209	91.3	24.1	PDF	IES	4,369	94.8	24.2	PDF	IES	4,560	98.9	24.4	PDF	IES	4,568	99.1	24.4	PDF	IES	4,784	103.8	24.5	PDF	IES	-	-	-	-	-
	3000	7000	91	9,735	107.0	18.9	PDF	IES	10,100	111.0	19.0	PDF	IES	10,565	116.1	19.2	PDF	IES	10,609	116.6	19.2	PDF	IES	11,092	121.9	19.4	PDF	IES	-	-	-	-	-
		6000	81.1	8,743	107.8	19.3	PDF	IES	9,080	112.0	19.5	PDF	IES	9,487	117.0	19.6	PDF	IES	9,515	117.3	19.6	PDF	IES	9,960	122.8	19.8	PDF	IES	-	-	-	-	-
		5000	72	7,744	107.6	19.8	PDF	IES	8,045	111.7	19.9	PDF	IES	8,394	116.6	20.1	PDF	IES	8,425	117.0	20.1	PDF	IES	8,809	122.3	20.3	PDF	IES	-	-	-	-	-
		4000	63.6	6,769	106.4	20.4	PDF	IES	7,032	110.6	20.6	PDF	IES	7,330	115.3	20.7	PDF	IES	7,975	106.6	22.3	PDF	IES	7,689	120.9	20.9	PDF	IES	-	-	-	-	-
		3000	55.9	5,781	103.4	21.2	PDF	IES	6,004	107.4	21.3	PDF	IES	6,256	111.9	21.5	PDF	IES	6,282	112.4	21.5	PDF	IES	6,560	117.4	21.6	PDF	IES	-	-	-	-	-
		2000	47.5	4,758	100.2	22.1	PDF	IES	4,940	104.0	22.3	PDF	IES	5,151	108.4	22.4	PDF	IES	5,165	108.7	22.4	PDF	IES	5,399	113.7	22.6	PDF	IES	-	-	-	-	-
		1000	40.8	3,757	92.1	23.4	PDF	IES	3,899	95.6	23.5	PDF	IES	4,067	99.7	23.7	PDF	IES	4,075	99.9	23.7	PDF	IES	4,265	104.5	23.8	PDF	IES	-	-	-	-	-
	2500	7000	85.6	9,271	108.3	17.7	PDF	IES	9,618	112.4	17.9	PDF	IES	10,062	117.5	17.9	PDF	IES	10,103	118.0	17.9	PDF	IES	10,562	123.4	18.1	PDF	IES	-	-	-	-	-
		6000	75.7	8,279	109.4	18.2	PDF	IES	8,598	113.6	18.3	PDF	IES	8,984	118.7	18.4	PDF	IES	9,009	119.0	18.4	PDF	IES	9,430	124.6	18.6	PDF	IES	-	-	-	-	-
		5000	66.6	7,281	109.3	18.7	PDF	IES	7,563	113.6	18.8	PDF	IES	7,891	118.5	19.0	PDF	IES	7,919	118.9	19.0	PDF	IES	8,280	124.3	19.2	PDF	IES	-	-	-	-	-
		4000	58.4	6,306	108.0	19.3	PDF	IES	6,550	112.2	19.4	PDF	IES	6,826	116.9	19.6	PDF	IES	6,856	117.4	19.6	PDF	IES	7,159	122.6	19.7	PDF	IES	-	-	-	-	-
		3000	50.7	5,317	104.9	20.1	PDF	IES	5,522	108.9	20.2	PDF	IES	5,753	113.5	20.4	PDF	IES	5,776	113.9	20.4	PDF	IES	6,030	118.9	20.5	PDF	IES	-	-	-	-	-
		2000	42.3	4,295	101.5	21.1	PDF	IES	4,458	105.4	21.2	PDF	IES	4,648	109.9	21.3	PDF	IES	4,659	110.1	21.4	PDF	IES	4,869	115.1	21.5	PDF	IES	-	-	-	-	-
		1000	35.6	3,293	92.5	22.4	PDF	IES	3,417	96.0	22.6	PDF	IES	3,564	100.1	22.7	PDF	IES	3,569	100.3	22.7	PDF	IES	3,735	104.9	22.9	PDF	IES	-	-	-	-	-
	2000	7000	80.1	8,815	110.0	16.3	PDF	IES	9,143	114.1	16.4	PDF	IES	9,567	119.4	16.6	PDF	IES	9,603	119.9	16.6	PDF	IES	10,042	125.4	16.7	PDF	IES	-	-	-	-	-
		6000	70.2	7,823	111.4	16.8	PDF	IES	8,123	115.7	16.9	PDF	IES	8,489	120.9	17.0	PDF	IES	8,509	121.2	17.0	PDF	IES	8,910	126.9	17.1	PDF	IES	-	-	-	-	-
		5000	61.1	6,824	111.7	17.3	PDF	IES	7,088	116.0	17.4	PDF	IES	7,396	121.0	17.6	PDF	IES	7,419	121.4	17.6	PDF	IES	7,760	127.0	17.7	PDF	IES	-	-	-	-	-
		4000	52.6	5,849	111.2	17.9	PDF	IES	6,075	115.5	18.1	PDF	IES	6,332	120.4	18.2	PDF	IES	6,357	120.9	18.2	PDF	IES	6,639	126.2	18.4	PDF	IES	-	-	-	-	-
		3000	44.9	4,860	108.2	18.7	PDF	IES	5,046	112.4	18.8	PDF	IES	5,258	117.1	19.0	PDF	IES	5,277	117.5	19.0	PDF	IES	5,510	122.7	19.1	PDF	IES	-	-	-	-	-
		2000	36.9	3,838	104.0	19.8	PDF	IES	3,983	107.9	19.9	PDF	IES	4,153	112.5	20.1	PDF	IES	4,160	112.7	20.1	PDF	IES	4,349	117.9	20.2	PDF	IES	-	-	-	-	-
		1000	30	2,836	94.5	21.3	PDF	IES	2,942	98.1	21.5	PDF	IES	3,069	102.3	21.6	PDF	IES	3,070	102.3	21.6	PDF	IES	3,215	107.2	21.8	PDF	IES	-	-	-	-	-
	1500	7000	75.1	8,348	111.2	14.4	PDF	IES	8,658	115.3	14.5	PDF	IES	9,063	120.7	14.6	PDF	IES	9,093	121.1	14.6	PDF	IES	9,513	126.7	14.7	PDF	IES	-	-	-	-	-
		6000	65.2	7,356	112.8	14.8	PDF	IES	7,638	117.1	15.0	PDF	IES	7,985	122.5	15.1	PDF	IES	8,000	122.7	15.1	PDF	IES	8,381	128.5	15.3	PDF	IES	-	-	-	-	-
		5000	56.2	6,357	113.1	15.4	PDF	IES	6,603	117.5	15.6	PDF	IES	6,892	122.6	15.7	PDF	IES	6,910	123.0	15.6	PDF	IES	7,231	128.7	15.8	PDF	IES	-	-	-	-	-
		4000	47.9	5,383	112.4	16.1	PDF	IES	5,590	116.7	16.2	PDF	IES	5,828	121.7	16.3	PDF	IES	5,847	122.1	16.3	PDF	IES	6,110	127.6	16.5	PDF	IES	-	-	-	-	-
		3000	40.2	4,394	109.3	16.9	PDF	IES	4,561	113.5	17.0	PDF	IES	4,754	118.3	17.2	PDF	IES	4,767	118.6	17.1	PDF	IES	4,981	123.9	17.4	PDF	IES	-	-	-	-	-
		2000	32.1	3,372	105.0	18.0	PDF	IES	3,498	109.0	18.2	PDF	IES	3,649	113.7	18.3	PDF	IES	3,650	113.7	18.3	PDF	IES	3,820	119.0	18.5	PDF	IES	-	-	-	-	-
		1000	25.2	2,370	94.0	19.7	PDF	IES	2,457	97.5	19.8	PDF	IES	2,565	101.8	20.0	PDF	IES	2,560	101.6	20.0	PDF	IES	2,686	106.6	20.1	PDF	IES	-	-	-	-	-
	1000	7000	70.6	7,891	111.8	11.7	PDF	IES	8,182	115.9	11.8	PDF	IES	8,569	121.4	12.0	PDF	IES	8,595	121.7	11.9	PDF	IES	8,995	127.4	12.0	PDF	IES	-	-	-	-	-
		6000	60.7	6,899	113.7	12.1	PDF	IES	7,162	118.0	12.2	PDF	IES	7,491	123.4	12.4	PDF	IES	7,501	123.6	12.4	PDF	IES	7,863	129.5	12.6	PDF	IES	-	-	-	-	-
		5000	51.7	5,900	114.1	12.8	PDF	IES	6,127	118.5	12.9	PDF	IES	6,397	123.7	13.1	PDF	IES	6,411	124.0	13.0	PDF	IES	6,713	129.8	13.1	PDF	IES	-	-	-	-	-
		4000	43.6	4,925	113.0	13.4	PDF	IES	5,114	117.3	13.6	PDF	IES	5,333	122.3	13.7	PDF	IES	5,349	122.7	13.7	PDF	IES	5,592	128.3	13.9	PDF	IES	-	-	-	-	-
		3000	35.8	3,936	109.9	14.4	PDF	IES	4,086	114.1	14.4	PDF	IES	4,260	119.0	14.6	PDF	IES	4,269	119.2	14.5	PDF	IES	4,463	124.7	14.7	PDF	IES	-	-	-	-	-
		2000	27.6	2,914	105.6	15.5	PDF	IES	3,022	109.5	15.6	PDF	IES	3,155	114.3	15.8	PDF	IES	3,152	114.2	15.8	PDF	IES	3,302	119.6	16.0	PDF	IES	-	-	-	-	-
		1000	20.8	1,913	92.0	17.5	PDF	IES	1,981	95.2	17.6	PDF	IES	2,071	99.6	17.7	PDF	IES	2,062	99.1	17.7	PDF	IES	2,168	104.2	17.9	PDF	IES	-	-	-	-	-

1. 4ft Luminaire photometry has been conducted in accordance with IES LM-79-08. IES files can be downloaded by clicking the links in the table above, or online at ledalite.com. Luminaires with finishes other than standard white may result in a drop in flux and efficacy.
2. Unified Glare Ratio (UGR) is calculated in accordance with CIE 117-1995. Reference conditions of 4Hx8Hx1H and reflectances of 70/50/20% have been applied using the procedure described in CIE 190-2010.
3. Input power stated at 3500K. BioUp & Tunable White, stated with Advance FlexTune SR driver & Interact Pro scalable wireless sensor, data may vary with other drivers.
4. BioUp delivers CRI 90+, 2700K-3000K, and CRI 80+, >3000K-5000K

*Candela plots shown are for 8000lm/4ft & 5000lm/4ft CRI 90, 3500K configurations. **Other distributions available.**

Two Light Engines* - AN (1000 lm Down/7000 lm Up)
Spacing Criteria: 1.38/1.20

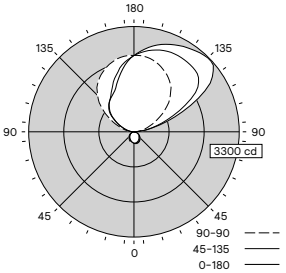

12% Down / 88% Up

Two Light Engines* - AN (4000 lm Down/1000 lm Up)
Spacing Criteria: 1.38/1.20

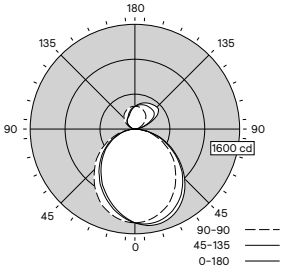

78% Down / 22% Up

Footnotes from page 1 ordering guide

1. Nominal values within a range. Not all lumen packages are available with all configurations. Consult photometry data for CRI, color temp, lumens & distribution of chosen configuration.
2. Not all wiring types are available with all configurations. Consult Ledalite for a complete list of available options.
3. 347V Only available with Advance Xitanium 0-10V (1% Dim) driver. Not available with other Drivers, Battery Pack, GTD, Interact Pro options. Battery packs available for UNV 120-277V drivers, lumen package limits may apply, check with Ledalite.
4. Interact Pro options require separate controls hardware by Signify.
5. Tunable White and BioUp options are available with Interact Pro wireless or with 2ch 0-10V or DALI-2 (DT6 or DT8) wired drivers. Please enquire about options such as Lutron T Series or DMX control (extended lead times may apply).
6. Auxiliary Wiring not available with Interact Pro luminaires. Aux sections are wired to one fixture end only.
7. Sensors must be combined with a Sensor Ready driver option. Default sensor colour is white, fixtures with black finish have black sensors. (Consult factory for other combinations).
8. Luminaires are pre-wired to both ends with quick wire connectors at one end for standard circuit & battery pack trigger wire (if applicable). Each circuit has its own neutral conductor. All circuits are clearly labelled at each end.
9. Must order IRT9015 Interact commissioning remote with each system order.
10. One Light Engine options only support single circuit. Two Light Engine options support single or dual circuits.
11. Other options not shown here may also be possible via a custom request. Extended lead times and minimum order quantities may apply, please consult factory.
12. UL924 listed sensor bypass relay is factory installed between driver & sensor. Must be ordered in same module as integral sensing option. Must be installed in conjunction with a UL1008 device.

Note: Due to continuing product improvements, Ledalite reserves the right to change the specifications without notice.

© 2025 Signify Holding. All rights reserved. The information provided herein is subject to change, without notice. Signify does not give any representation or warranty as to the accuracy or completeness of the information included herein and shall not be liable for any action in reliance thereon. The information presented in this document is not intended as any commercial offer and does not form part of any quotation or contract, unless otherwise agreed by Signify.

GENLYTE SOLUTIONS
a signify business

Signify North America Corp.
400 Crossing Blvd, Suite 600
Bridgewater, NJ 08807
Telephone: 800-555-0050

Signify Canada Ltd.
281 Hillmount Road,
Markham, ON, Canada L6C 2S3
Telephone: 800-668-9008

All trademarks are owned by Signify Holding or their respective owners.