LEDALITE

Linear

Sona

Suspended

Incredible efficacy & boundless lighting choices mean the re-engineered **Sona suspended LED** is destined to become a future classic. Flexible up/ down distributions and tailored LED optics mean you always have the right light for every task.

Project:

Location:

Cat.No:

Type:

Line ID: Qty:

Notes:

Ordering guide - Standard

Example: 7705LABAA087DET, A1-48

Family	Version	Mount Type	Source	CRI/CCT[1]	Lumens[1]	Optics & Distribution	Run Length	Wiring[2]
77								
77 Sona	**0** One Light Engine - Upper	**3** Suspended Indirect	**L** LED	**A** 80CRI/ 4000K **B** 80CRI/ 3500K **C** 80CRI/ 3000K	**C** 4900 lm/4ft **E** 3400 lm/4ft	**NA** Solid Housing / Acrylic Diffuser	**04** 4ft **08** 8ft **xx** Continuous Run (4ft increments)	**7** 1cct Dimming **E** 2cct A/B Dimming (Alt. 4ft sections) **M** 1cct Dimming + Aux. Wiring **N** 1cct Dimming + Battery Pack
		5 Suspended Indirect/Direct (50-75% Up)			**B** 6100 lm/4ft **C** 4500 lm/4ft **E** 3100 lm/4ft	**AA** Acrylic Diffusers (70% Up) **VA** White Louvers / Acrylic Diffuser (75% Up) **AD** Acrylic Diffusers + Down Kit (50% Down) **VD** White Louvers + Down Kit (50% Down)		
	1 One Light Engine - Lower	**1** Suspended Direct			**C** 4500 lm/4ft **E** 3200 lm/4ft **G** 2100 lm/4ft	**AN** Acrylic Diffuser/Solid Housing **VN** White Louvers/Solid Housing **AG** Acrylic Diffusers (80% Down) **VG** White Louvers/Acrylic Diffuser (80% Down)		
	2 Two Light Engines - Upper & Lower	**5** Suspended Indirect/Direct (60-70% Up)			**Y** 8200 lm/4ft (60% Up) **A** 7000 lm/4ft (70% Up) **B** 5500 lm/4ft (60% Up) **C** 4600 lm/4ft (70% Up) **E** 3500 lm/4ft (65% Up)	**AA** Acrylic Diffusers **VA** White Louvers / Acrylic Diffuser		**G** 2cct Dimming (Up/Down) **K** 2cct Dimming (Up/Down) + Aux. Wiring **L** 2cct Dimming (Up/Down) + Battery Pack
		6 Suspended Direct/Indirect (50-60% Dn)			**A** 6700 lm/4ft (50% Dn) **B** 5500 lm/4ft (60% Dn) **D** 4600 lm/4ft (50% Dn)			

Voltage	Driver	Finish	Option	Sensor
D UNV 120-277V **3** 347V	**E** Advance 0-10V (1% Dim)	**W** Standard White **T** Titanium Silver **B** Black **C** Custom	**N** No Option **V** Variable Mount Housing (7705 and 7711 series only 12" of variability in 1" steps on both ends of a 4ft or 8ft module.)	**NN** None
D UNV 120-277V	**S** Advance Sensor Ready (1% Dim)			
D UNV 120-277V **3** 347V	**E** Advance 0-10V (1% Dim)			

Mount Type		Suspension
A1	Non-accessible ceiling, 0°-15° Slope Mount	**24** 24"
A2	T-grid Fixed Position Mount	**48** 48"
A3	Non-accessible ceiling, 0°-90° Slope Mount	**96** 96"
A5	T-grid 24" Span Mount (non tegular tile only)	**144** 144"
A6-1	T-grid On-grid Mount 15/16" (non tegular tile only)	
A6-2	T-grid On-grid Mount 9/16" (non tegular tile only)	
A6-3	T-grid On-grid Mount 9/16" x 5/16" (slot tee & tegular tile)	

1. Nominal values within a range. Down kits reduce optical efficiency. Consult photometry data for CRI, color temp, lumens & distribution of chosen configuration.
2. Not all wiring types are available with all configurations. Consult Ledalite for a complete list of available options.

See p. 2 for Connected & IoT product offerings.

Not all product variations listed on this page are DLC qualified. To ensure that a specific model is qualified, visit www.designlights.org/search

Sona linear suspended

Ordering guide – Connected systems

example: 7711LAGVG087DSWNIP, A1-48

Family	Version	Mount Type	Source	CRI/CCT[1]	Lumens[1]	Optics & Distribution	Run Length	Wiring[2]
77			L					
77 Sona	**0** One Light Engine - Upper	**3** Suspended Indirect	**L** LED	**A** 80CRI/4000K **B** 80CRI/3500K **C** 80CRI/3000K	**C** 4900 lm/4ft **E** 3400 lm/4ft	**NA** Solid Housing / Acrylic Diffuser	**04** 4ft **08** 8ft **xx** Continuous Run (4ft increments)	**7** 1cct Dimming **N** 1cct Dimming + Battery Pack
		5 Suspended Indirect/ Direct (50-75% Up)			**C** 4500 lm/4ft **E** 3100 lm/4ft	**AA** Acrylic Diffusers (70% Up) **VA** White Louvers / Acrylic Diffuser (75% Up) **AD** Acrylic Diffusers + Down Kit (50% Down) **VD** White Louvers + Down Kit (50% Down)		
	1 One Light Engine - Lower	**1** Suspended Direct		**2** 2-channel Tunable White 80CRI/ 2700-6500K	**E** 3200 lm/4ft **G** 2100 lm/4ft	**AN** Acrylic Diffuser / Solid Housing **VN** White Louvers / Solid Hosuing **AG** Acrylic Diffusers (80% Down) **VG** White Louvers / Acrylic Diffuser (80% Down)		
	2 Two Light Engines - Upper & Lower	**5** Suspended Indirect/ Direct (60-70% Up)			**E** 3500 lm/4ft (65% Up)	**AA** Acrylic Diffusers **VA** White Louvers / Acrylic Diffuser		
		6 Suspended Direct/ Indirect (50-60% Dn)			**D** 4600 lm/4ft (50% Dn)			

Voltage	Driver	Finish	Option	System/Controls[2,3]	Mount Type	Suspension[4]
D UNV 120-277V **3** 347V	**S** Advance Sensor Ready (1% Dim)	**W** Standard White **T** Titanium Silver **B** Black **C** Custom	**N** No Option **V** Variable Mount Housing (7705 and 7711 series only)	**CS** Interact Pro scalable wireless sensor with integral daylight & occupancy sensing, advanced grouping with dwell time	**A1** Non-accessible ceiling, 0°-15° Slope Mount **A2** T-grid Fixed Position Mount **A3** Non-accessible ceiling, 0°-90° Slope Mount **A5** T-grid 24" Span Mount (non tegular tile only) **A6-1** T-grid On-grid Mount 15/16" (non tegular tile only) **A6-2** T-grid On-grid Mount 9/16" (non tegular tile only) **A6-3** T-grid On-grid Mount 9/16" x 5/16" (slot tee & tegular tile)	**24** 24" **48** 48" **96** 96" **144** 144"
L Low Voltage (48-54V DC)	**P** PoE Lighting Controller			**IO** Interact Office Wired (PoE) with Daylight and Occupancy		

Note: Options with the same color coding must be paired together.

1. Nominal values within a range. Consult photometry data for CRI, color temp, lumens & distribution of chosen configuration.
2. Not all wiring types or sensors are available with all configurations. Consult Ledalite for a complete list of available options.
3. Sensors only available in white, sensors can be combined with any luminaire finish.
4. For PoE, the CAT5/CAT6 cable to be provided by others. Specifier should coordinate the desired cable color with the contractor.

Sona linear suspended

Cross Section View

One Light Engine Upper – Indirect (7703)

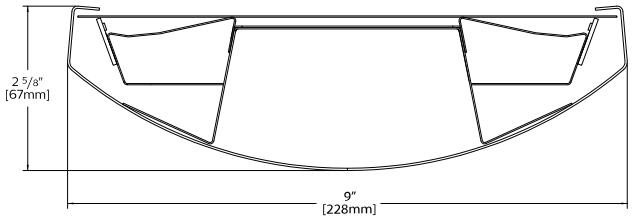

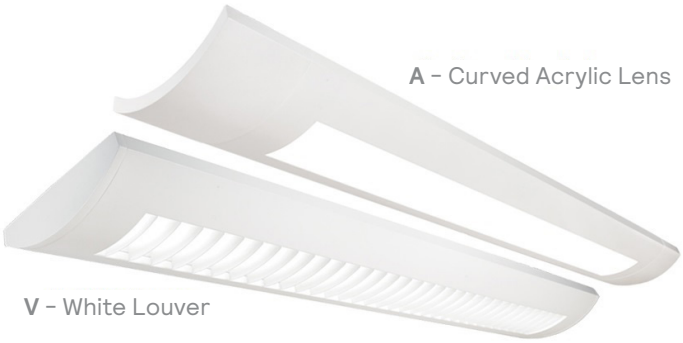

One Light Engine Upper – Indirect/Direct (7705)

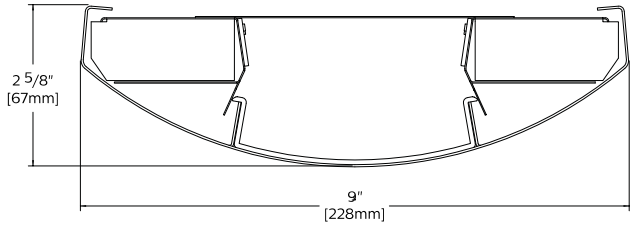

One Light Engine Lower – Direct (7711)

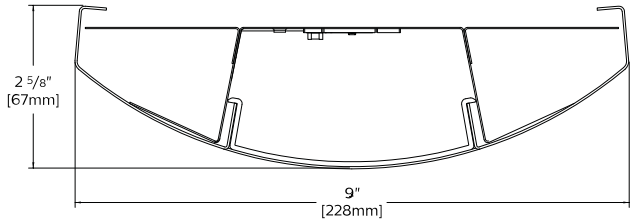

Two Light Engines Upper & Lower – Indirect/Direct (7725 & 7726)

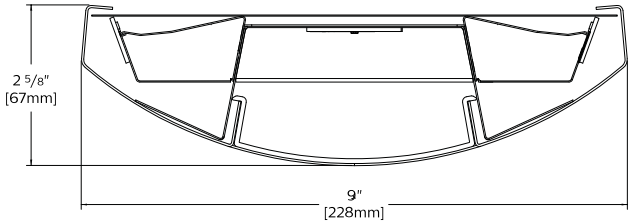

Endcaps

S – Sculpted (Standard)

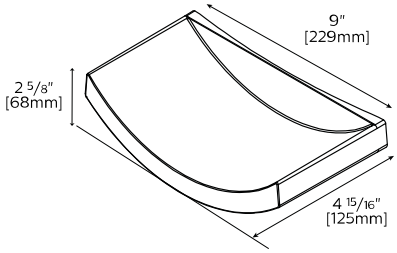

F – Flat

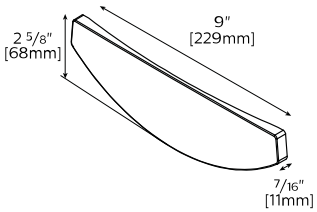

Module Details & Dimensions

Suspended – Side View, No Endcaps

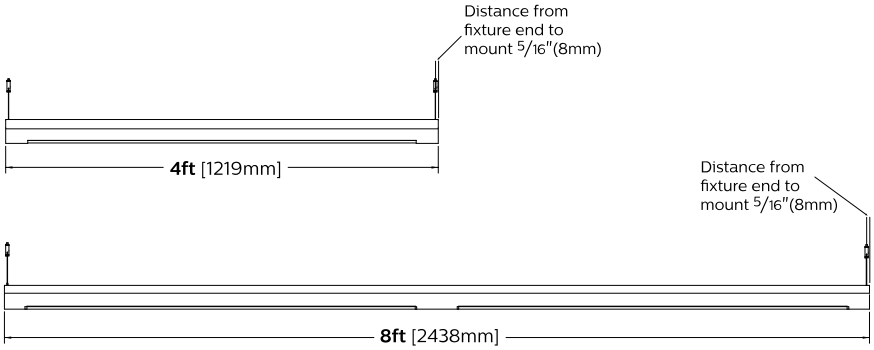

Sona linear suspended

Specifications

Optical System

1. Light Engine Upper: Lateral-facing LED arrays deliver light into both the upper and lower hemispheres, giving a highly efficient, native 70% up / 30% down distribution with a wide, homogeneous upper batwing distribution. A fully indirect version with a solid lower housing can be specified, as well as a 50% down-light kit option.
1. Light Engine Lower:A downward-facing LED array aims light into the lower hemisphere, for a highly efficient, fully direct distribution or optional 80% down version.
2. Light Engines: :Both lateral-facing and downwardfacing LED arrays are combined in separate upper and lower chambers for the ultimate in up/down distribution control.

Lenses: On the upper surface an engineered diffuser smooths the light distribution on the ceiling and acts as a dust cover. On the lower surface, two 4" wide optics are available: either a curved, engineered acrylic diffuse lens flush to the housing; or a white louver with regressed diffuser for improved high angle cut-off and visual comfort.

Endcaps

Diecast aluminum endcaps, either Sculpted (curved) or Flat. Sculpted endcaps come standard.

Finish

High quality powder coated, available in matte white, black or titanium silver. Other custom colors, including pacific aqua, are available on request. White sensors only.

Housing

Precision formed 18 gauge cold-rolled steel. Cross section size (approx.): 2.6" h x 9" w (suspended) or 7.4" w (wall mount).

Weight

Maximum: Suspended 4.9lb/ft, Wall 3.4lb/ft.

Electrical

Factory pre-wired to section ends with quick-wire connectors.

Standard Drivers

Advance Xitanium 0-10V, 1% dimming.

Advance Xitanium Sensor Ready, 1% dimming.

PoE Lighting Controller (for PoE static or tunable white).

Class 2 rated output.
Consult Ledalite for other available drivers.

Standard Battery Pack

Bodine Battery Pack, 90 min, 10W, Class 2 rated output. Lumen output = 10W x luminaire efficacy x 1.1. Typical output 1200lm.

PoE Battery Pack, 90 min, 6W, Class2 rated output. Lumen output = 6W x luminaire efficacy. Typical output 700lm.

Lumen Maintenance

LEDs have been tested by the manufacturer in accordance with IESNA LM-80-08. At an ambient temperature of 25°C, the LED lumen maintenance expectation according to IES TM-21-11 is:
L80 (12k) >72,000 hrs (Reported methodology)

Source Color

LEDs rated for color rendering of:
CRI >80 & R9 >0
CRI >90 & R9>50

Fixture to fixture color accuracy within:
3 SDCM for Static White & Tunable White luminaires.

Mounting

Rapid installation sling mount at joints and ends. High strength aircraft cable and stainless steel gripper provide unlimited vertical adjustment and are independently tested to stringent safety standards. Variable mounting along the length of the housing is available for certain configurations upon request which allows 12" of variability in 1" steps on both ends of a 4ft or 8ft module.

Joints

Self-aligning, gasketed joining system wth hands-free wiring feature.

Approvals

Certified to UL, CSA and IES standards. Most suspended versions (except 1 light chamber down with louver) are DesignLights Consortium® qualified. Please see the DLC QPL list for exact catalog numbers, www.designlights.org/QPL

Quick Ship

Available for most non-connected configurations upon request. More information available at: www.signify.com/en-us/brands/ledalite/quickship

Warranty

Signify indoor professional luminaires 5 year LED warranty: www.signify.com/warranties.

Environment

Rated for dry or damp locations in operating ambient temperatures 0-40°C (32-104°F). Certain luminaire components may be adversely affected by contaminants. Damage caused by sulfur, chlorine, petroleum based solutions or other contaminants in the area of operation are not covered under warranty. Not suitable for natatorium environments.

Sona linear suspended

Wireless Controls Options

Interact Pro scalable sensor for Foundation, Advanced & Enterprise tiers (CS an evolution of SpaceWise):

- CS is a connected sensor with integral occupancy and daylight sensing and supports wireless mesh connectivity.
- The sensor works in the Foundation mode (similar to SpaceWise) when configured without a gateway or in an Interact Pro Advanced or Enterprise mode if a compatible gateway is used.
- Interact Pro includes an App, a portal and a broad portfolio of wireless luminaires, lamps and retrofit kits all working on the same system.
- Startup is implemented via Interact Pro App (Android or iPhone) & Bluetooth connectivity. The App provides flexibility to choose between a gateway or non gateway mode for setup.
- Setup with the gateway requires wired internet access to the gateway. It is possible to add a gateway at a later point.
- Prepare project configuration steps remotely and use IRT9015 remote onsite to identify and group devices together.
- Compatible with UID8451/10 wireless dimmer switch, SWS200 wireless scene switch, wireless Occ sensor (OCC SENSOR IA CM IP42 WH 10/1) and wireless Day/Occ sensor (OCC MULTI SENSOR IA CM WH 10/1).
- For more information on Interact Pro visit: www.interact-lighting.com/interactproscalablesystem

Emergency Options (R):

- Power Sensing (Factory default) – Recommended
- UL924 option requires unswitched power sense line, absence of voltage on the normal circuit triggers luminaire to 100% output.
- Power Interruption Detection (Field option)
- Detects AC power interruption >30ms triggers 90 minute emergency mode with luminaire at 100% output.

Interact Pro scalable sensor bundles for Enterprise tier (SB):

- SB option, in addition to occupancy and daylight sensing, supports advanced IoT capabilities such as people estimation analysis, desk level temperature & humidity sensing, noise classification, and BLE beacon.
- Compatible with UID8451/10 wireless dimmer switch, SWS200 wireless scene switch, wireless Occ sensor (OCC SENSOR IA CM IP42 WH 10/1) and wireless Day/Occ sensor (OCC MULTI SENSOR IA CM WH 10/1).
- Use Interact software and insights to increase building efficiency, achieve building wide integration and optimize space through occupancy analytics.
- Requires compatible Gateway and internet connectivity for commissioning. For more information, visit: www.interact-lighting.com/office

Wired Controls Options

Interact Office Wired PoE (IO & SB):

- PoE based IoT connected lighting solution for large enterprises that span across multiple floors, buildings and require multiple gateways.
- Use Interact software and insights to increase building efficiency, achieve building wide integration and optimize space through occupancy analytics.
- Integral sensor option for occupancy sensing (PIR) and/or daylight harvesting available for additional energy savings.
- SB option, in addition to occupancy and daylight sensing, supports advanced IoT capabilities such as people estimation analysis, desk level temperature & humidity sensing, noise classification, and BLE beacon.
- Optional integral emergency controller and battery pack provides backup lighting in the case of a power outage. Test switch and indicator light mounted on the chassis.
- Emergency battery has a 3 month pre-installed shelf life, and must be stored and installed in environments of -20°C to 30°C (-4F to 86F) ambient, and 45-85% relative humidity.
- For more information on Interact Office Wired visit: www.interact-lighting.com/office

Tunable White:

- Tunable White is available in Interact Office Wired PoE luminaires. Other control options for Tunable White with DALI (DT6 or DT8), 0-10V, Lutron T Series or DMX control are available via an Engineered-to-Order (ETO) request.
- Signify tunable white solutions are designed to help maximize the influence of lighting on your daily life.
- Dynamic behaviors via scheduled lighting recipes mimicking daylight patterns or supporting biorhythms.
- Scene setting via lighting pre-sets based on various combinations of lighting color temperature and intensity.

Sona linear suspended

Functionalities overview

	The three tiers of Interact		
	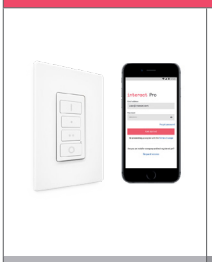	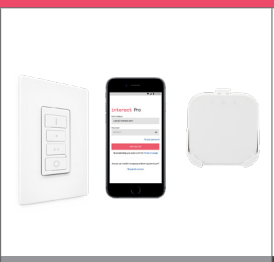	
	Standalone	Gateway	Gateway + IoT
Dimming, grouping, and zoning	✓	✓	✓
Bluetooth and ZigBee enabled	✓	✓	✓
Motion sensing and daylight harvesting	✓	✓	✓
Integration with 0-10V and phase dimming fixtures	✓	✓	✓
Code compliance	✓	✓	✓
Granular dimming and dwell time	✓	✓	✓
New Correlated color temperature (CCT) tuning by switch	✓	✓	✓
New Support for sensor-based Tunable White luminaires	✓	✓	✓
Energy reporting and monitoring		✓	✓
Scheduling		✓	✓
Demand response		✓	✓
BMS integration (BACnet)			✓
Floor plan visualization			✓
IoT sensors for wellness			✓
IoT Apps for productivity			✓

Currently supported maximum system size

To be able to design the lighting system correctly for the customer, it is important to know the prime characteristics of the system, its possibilities and limitations.

System level	
Total number of gateways	Unlimited
Total number of devices	200 per network
• luminaires with integrated sensors	150
• smart TLEDS	150
Total number of ZGP devices (sensors and switches)	50
• sensors	30
• switches	50
• zones and groups	64
Group level	
Recommended number of lights	40 (recommended 25)
Number of ZGP devices	5
Number of scenes	16

Interact system architecture for office, education, healthcare, retail, industrial and parking applications

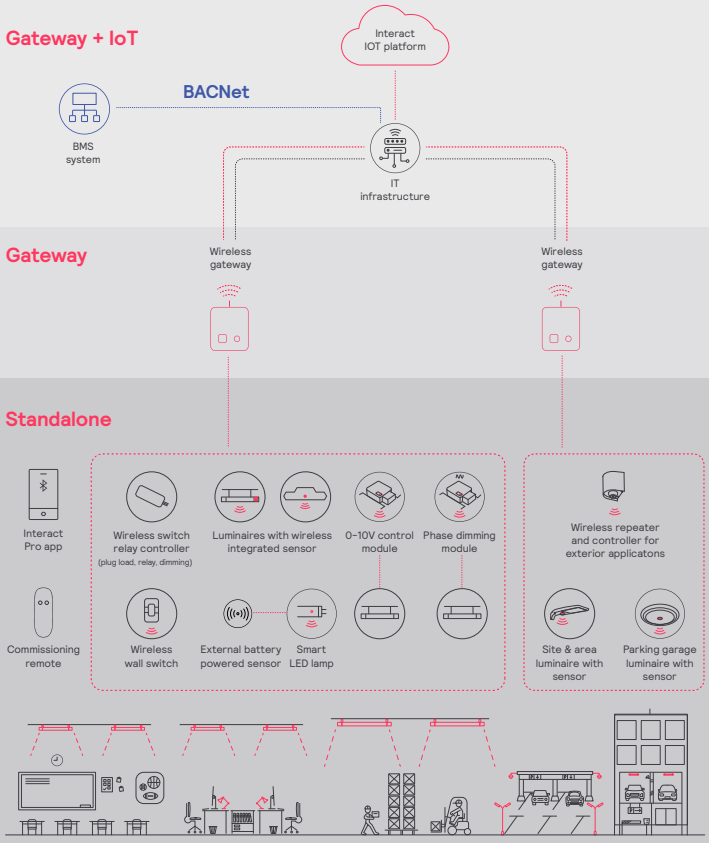

Sona linear suspended

Photometrics

One Light Engine Upper - Indirect (7703)

(Click "IES" text to Download)

Optics	Lumen Package	Nominal CRI & CCT	Flux (lm)	Watts (W)	Efficacy (LPW)	CRI	R9	Distribution	RP-1 VDT	IES File
Solid Housing / Acrylic Diffuser NA	4900lm/4ft	80CRI, 4000K	4975	33.6	148.1	84	11	100% Up / 0% Down	Critical spaces	IES
		80CRI, 3500K	4870	33.4	145.8	83	9	100% Up / 0% Down	Critical spaces	IES
		80CRI, 3000K	4680	33.4	140.1	84	11	100% Up / 0% Down	Critical spaces	IES
	3400lm/4ft	80CRI, 4000K	3456	23.2	149.0	84	11	100% Up / 0% Down	Critical spaces	IES
		80CRI, 3500K	3384	23.0	147.1	83	9	100% Up / 0% Down	Critical spaces	IES
		80CRI, 3000K	3252	23.0	141.4	84	11	100% Up / 0% Down	Critical spaces	IES

NA - Solid Housing / Acrylic Diffuser

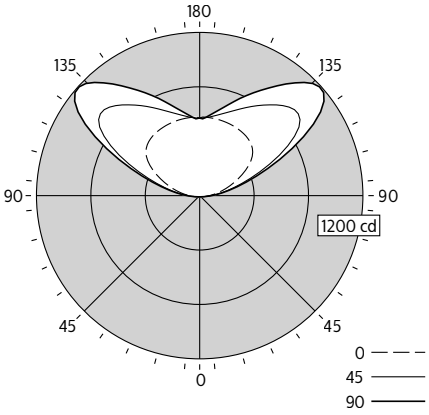

100% Up / 0% Down

*Candela shown is for 3400 lm/4ft, 3500K, 80 CRI configuration.

Sona linear suspended

Photometrics

One Light Engine Upper - Indirect/Direct (7705)

(Click "IES" text to Download)

Optics	Lumen Package	Nominal CRI & CCT	Flux (lm)	Watts (W)	Efficacy (LPW)	CRI	R9	Distribution	RP-1 VDT	IES File
Acrylic Diffusers (70% Up) AA	6100 lm/4ft	80CRI, 4000K	6273	45.6	137.6	84	11	68% Up / 32% Down	N/A	IES
		80CRI, 3500K	6142	45.3	135.6	83	9	68% Up / 32% Down	N/A	IES
		80CRI, 3000K	5899	45.3	130.2	84	11	68% Up / 32% Down	N/A	IES
	4500 lm/4ft	80CRI, 4000K	4648	33.3	139.6	84	11	68% Up / 32% Down	N/A	IES
		80CRI, 3500K	4551	33.1	137.5	83	9	68% Up / 32% Down	Normal spaces	IES
		80CRI, 3000K	4371	33.1	132.1	84	11	68% Up / 32% Down	Normal spaces	IES
	3100 lm/4ft	80CRI, 4000K	3229	23.0	140.4	84	11	68% Up / 32% Down	Critical spaces	IES
		80CRI, 3500K	3162	22.8	138.7	83	9	68% Up / 32% Down	Critical spaces	IES
		80CRI, 3000K	3038	22.8	133.2	84	11	68% Up / 32% Down	Critical spaces	IES
White Louvers / Acrylic Diffuser (75% Up) VA	6100 lm/4ft	80CRI, 4000K	6104	45.8	133.3	84	11	74% Up / 26% Down	Normal spaces	IES
		80CRI, 3500K	5977	45.5	131.4	83	9	74% Up / 26% Down	Normal spaces	IES
		80CRI, 3000K	5741	45.5	126.2	84	11	74% Up / 26% Down	Normal spaces	IES
	4500 lm/4ft	80CRI, 4000K	4523	33.5	135.0	84	11	74% Up / 26% Down	Normal spaces	IES
		80CRI, 3500K	4428	33.3	133.0	83	9	74% Up / 26% Down	Normal spaces	IES
		80CRI, 3000K	4254	33.3	127.7	84	11	74% Up / 26% Down	Normal spaces	IES
	3100 lm/4ft	80CRI, 4000K	3142	23.1	136.0	84	11	74% Up / 26% Down	Critical spaces	IES
		80CRI, 3500K	3077	22.9	134.4	83	9	74% Up / 26% Down	Critical spaces	IES
		80CRI, 3000K	2956	22.9	129.1	84	11	74% Up / 26% Down	Critical spaces	IES
Acrylic Diffusers + Down Kit (50% Down) AD	6100 lm/4ft	80CRI, 4000K	5706	45.8	124.6	84	11	50% Up / 50% Down	N/A	IES
		80CRI, 3500K	5587	45.5	122.8	83	9	50% Up / 50% Down	N/A	IES
		80CRI, 3000K	5366	45.5	117.9	84	11	50% Up / 50% Down	N/A	IES
	4500 lm/4ft	80CRI, 4000K	4228	33.5	126.2	84	11	50% Up / 50% Down	N/A	IES
		80CRI, 3500K	4139	33.3	124.3	83	9	50% Up / 50% Down	N/A	IES
		80CRI, 3000K	3976	33.3	119.4	84	11	50% Up / 50% Down	N/A	IES
	3100 lm/4ft	80CRI, 4000K	2937	23.1	127.1	84	11	50% Up / 50% Down	Normal spaces	IES
		80CRI, 3500K	2876	22.9	125.6	83	9	50% Up / 50% Down	Normal spaces	IES
		80CRI, 3000K	2763	22.9	120.7	84	11	50% Up / 50% Down	Normal spaces	IES
White Louvers + Down Kit (50% Down) VD	6100 lm/4ft	80CRI, 4000K	5383	45.6	118.0	84	11	57% Up / 43% Down	N/A	IES
		80CRI, 3500K	5271	45.3	116.4	83	9	57% Up / 43% Down	N/A	IES
		80CRI, 3000K	5063	45.3	111.8	84	11	57% Up / 43% Down	N/A	IES
	4500 lm/4ft	80CRI, 4000K	3989	33.3	119.8	84	11	57% Up / 43% Down	Normal spaces	IES
		80CRI, 3500K	3905	33.1	118.0	83	9	57% Up / 43% Down	Normal spaces	IES
		80CRI, 3000K	3751	33.1	113.3	84	11	57% Up / 43% Down	Normal spaces	IES
	3100 lm/4ft	80CRI, 4000K	2771	23.0	120.5	84	11	57% Up / 43% Down	Normal spaces	IES
		80CRI, 3500K	2714	22.8	119.0	83	9	57% Up / 43% Down	Normal spaces	IES
		80CRI, 3000K	2607	22.8	114.3	84	11	57% Up / 43% Down	Critical spaces	IES

(following on page 7)

Sona linear suspended

Photometrics (cont'd from page 6)

One Light Engine Upper - Indirect/Direct (7705)

AA - Acrylic Diffusers (70% Up)

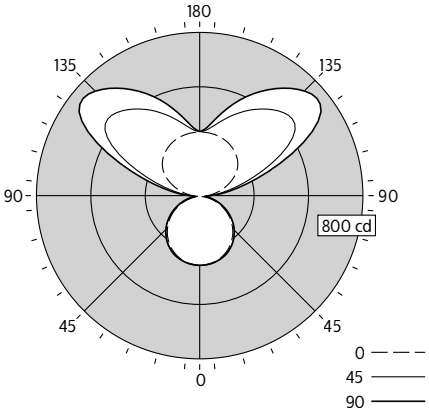

68% Up / 32% Down

VA - White Louvers / Acrylic Diffuser (75% Up)

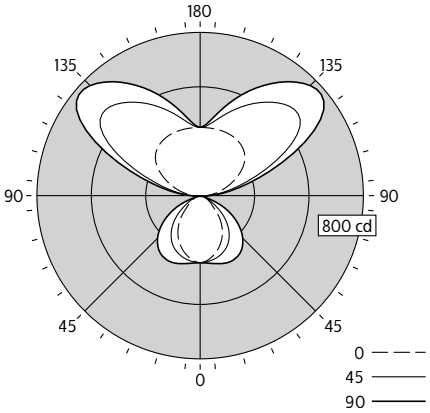

74% Up / 26% Down

AD - Acrylic Diffusers + Down Kit (50% Down))

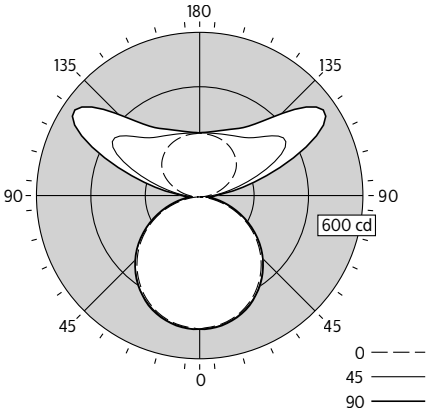

50% Up / 50% Down

VD - White Louvers + Down Kit (50% Down)

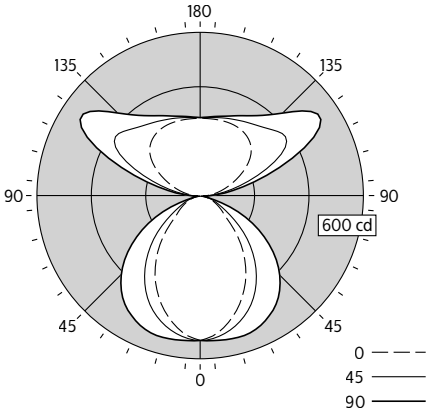

57% Up / 43% Down

***Candela shown is for 3100 lm/4ft, 3500K, 80 CRI configuration.**

Sona linear suspended

Photometrics

One Light Engine Lower - Direct (7711)

(Click "IES" text to Download)

Optics	Lumen Package	Nominal CRI & CCT	Flux (lm)	Watts (W)	Efficacy (LPW)	CRI	R9	Distribution	RP-1 VDT	IES File
Acrylic Diffuser / Solid Housing AN	4500 lm/4ft	80CRI, 4000K	4830	42.5	113.6	83	6	2% Up / 98% Down	N/A	IES
		80CRI, 3500K	4714	42.5	110.9	82	3	2% Up / 98% Down	N/A	IES
		80CRI, 3000K	4469	42.5	105.2	82	2	2% Up / 98% Down	N/A	IES
	3200 lm/4ft	80CRI, 4000K	3494	30.1	116.1	83	6	2% Up / 98% Down	N/A	IES
		80CRI, 3500K	3410	30.1	113.3	82	3	2% Up / 98% Down	N/A	IES
		80CRI, 3000K	3232	30.1	107.4	82	2	2% Up / 98% Down	N/A	IES
	2100 lm/4ft	80CRI, 4000K	2280	19.3	118.1	83	6	2% Up / 98% Down	N/A	IES
		80CRI, 3500K	2226	19.3	115.3	82	3	2% Up / 98% Down	N/A	IES
		80CRI, 3000K	2110	19.3	109.3	82	2	2% Up / 98% Down	N/A	IES
White Louvers / Solid Housing VN	4500 lm/4ft	80CRI, 4000K	4167	42.5	98.0	83	6	2% Up / 98% Down	N/A	IES
		80CRI, 3500K	4068	42.5	95.7	82	3	2% Up / 98% Down	N/A	IES
		80CRI, 3000K	3856	42.5	90.7	82	2	2% Up / 98% Down	N/A	IES
	3200 lm/4ft	80CRI, 4000K	3014	30.1	100.1	83	6	2% Up / 98% Down	Normal spaces	IES
		80CRI, 3500K	2941	30.1	97.7	82	3	2% Up / 98% Down	Normal spaces	IES
		80CRI, 3000K	2790	30.1	92.7	82	2	2% Up / 98% Down	Normal spaces	IES
	2100 lm/4ft	80CRI, 4000K	1967	19.3	101.9	83	6	2% Up / 98% Down	Normal spaces	IES
		80CRI, 3500K	1920	19.3	99.5	82	3	2% Up / 98% Down	Normal spaces	IES
		80CRI, 3000K	1821	19.3	94.4	82	2	2% Up / 98% Down	Normal spaces	IES
Acrylic Diffusers (80% Down) AG	4500 lm/4ft	80CRI, 4000K	5220	42.1	124.0	83	6	21% Up / 79% Down	N/A	IES
		80CRI, 3500K	5095	42.1	121.0	82	3	21% Up / 79% Down	N/A	IES
		80CRI, 3000K	4830	42.1	114.7	82	2	21% Up / 79% Down	N/A	IES
	3200 lm/4ft	80CRI, 4000K	3776	29.8	126.7	83	6	21% Up / 79% Down	N/A	IES
		80CRI, 3500K	3685	29.8	123.7	82	3	21% Up / 79% Down	N/A	IES
		80CRI, 3000K	3494	29.8	117.2	82	2	21% Up / 79% Down	N/A	IES
	2100 lm/4ft	80CRI, 4000K	2464	19.1	129.0	83	6	21% Up / 79% Down	N/A	IES
		80CRI, 3500K	2406	19.1	126.0	82	3	21% Up / 79% Down	N/A	IES
		80CRI, 3000K	2281	19.1	119.4	82	2	21% Up / 79% Down	N/A	IES
White Louvers / Acrylic Diffuser (80% Down) VG	4500 lm/4ft	80CRI, 4000K	4740	42.5	111.5	83	6	27% Up / 73% Down	N/A	IES
		80CRI, 3500K	4626	42.5	108.8	82	3	27% Up / 73% Down	Normal spaces	IES
		80CRI, 3000K	4386	42.5	103.2	82	2	27% Up / 73% Down	Normal spaces	IES
	3200 lm/4ft	80CRI, 4000K	3428	30.1	113.9	83	6	27% Up / 73% Down	Normal spaces	IES
		80CRI, 3500K	3345	30.1	111.1	82	3	27% Up / 73% Down	Normal spaces	IES
		80CRI, 3000K	3173	30.1	105.4	82	2	27% Up / 73% Down	Normal spaces	IES
	2100 lm/4ft	80CRI, 4000K	2237	19.3	115.9	83	6	27% Up / 73% Down	Normal spaces	IES
		80CRI, 3500K	2184	19.3	113.2	82	3	27% Up / 73% Down	Normal spaces	IES
		80CRI, 3000K	2071	19.3	107.3	82	2	27% Up / 73% Down	Critical spaces	IES

(following on page 9)

Sona linear suspended

Photometrics (cont'd from page 8)

One Light Engine Lower - Direct (7711)

AN - Acrylic Diffuser / Solid Housing

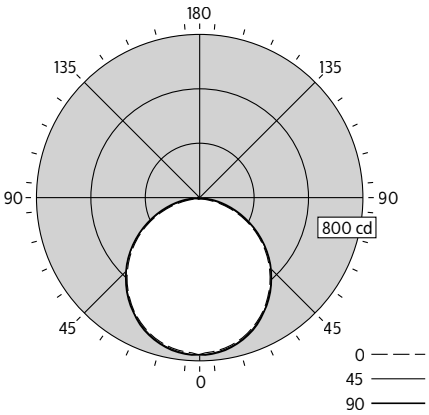

2% Up / 98% Down

VN - White Louvers / Solid Housing

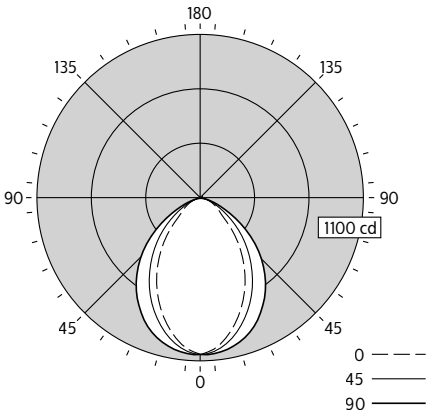

2% Up / 98% Down

AG - Acrylic Diffusers (80% Down)

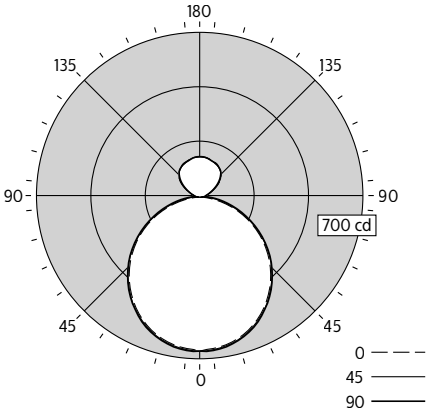

21% Up / 79% Down

VG - White Louvers / Acrylic Diffuser (80% Down)

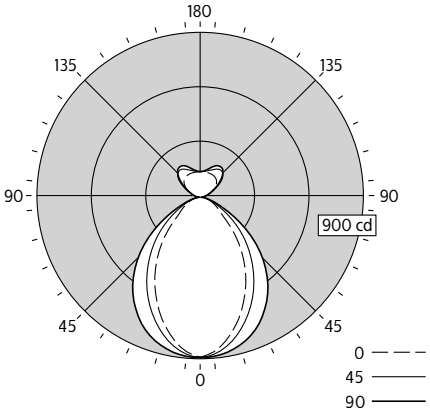

27% Up / 73% Down

***Candela shown is for 2100 lm/4ft, 3500K, 80 CRI configuration.**

Sona linear suspended

Photometrics

Two Light Engines Upper & Lower - Indirect/Direct (7725)

(Click "IES" text to Download)

Optics	Lumen Package	Nominal CRI & CCT	Flux (lm)	Watts (W)	Efficacy (LPW)	CRI	R9	Distribution	RP-1 VDT	IES File
Acrylic Diffusers (60-70% Up) AA	8200 lm/4ft	80CRI, 4000K	8410	63.7	132.0	84	11	59% Up / 41% Down	N/A	IES
		80CRI, 3500K	8223	63.5	129.5	83	9	59% Up / 41% Down	N/A	IES
		80CRI, 3000K	7857	63.5	123.7	84	11	60% Up / 40% Down	N/A	IES
	7000 lm/4ft	80CRI, 4000K	7217	52.9	136.4	84	11	69% Up / 31% Down	N/A	IES
		80CRI, 3500K	7058	52.7	133.9	83	9	69% Up / 31% Down	N/A	IES
		80CRI, 3000K	6753	52.7	128.1	84	11	69% Up / 31% Down	N/A	IES
	5500 lm/4ft	80CRI, 4000K	5698	42.5	134.1	84	11	61% Up / 39% Down	N/A	IES
		80CRI, 3500K	5572	42.3	131.7	83	9	61% Up / 39% Down	N/A	IES
		80CRI, 3000K	5325	42.3	125.9	84	11	61% Up / 39% Down	N/A	IES
	4600 lm/4ft	80CRI, 4000K	4792	35.2	136.1	84	11	72% Up / 28% Down	Normal spaces	IES
		80CRI, 3500K	4688	35.0	133.9	83	9	72% Up / 28% Down	Critical spaces	IES
		80CRI, 3000K	4488	35.0	128.2	84	11	73% Up / 27% Down	Critical spaces	IES
	3500 lm/4ft	80CRI, 4000K	3626	27.2	133.3	84	11	63% Up / 37% Down	Normal spaces	IES
		80CRI, 3500K	3546	27.1	130.8	83	9	63% Up / 37% Down	Critical spaces	IES
		80CRI, 3000K	3390	27.1	125.1	84	11	64% Up / 36% Down	Critical spaces	IES
White Louvers / Acrylic Diffuser (60-70% Up) VA	8200 lm/4ft	80CRI, 4000K	7924	63.7	124.4	84	11	63% Up / 37% Down	Normal spaces	IES
		80CRI, 3500K	7748	63.5	122.0	83	9	63% Up / 37% Down	Normal spaces	IES
		80CRI, 3000K	7409	63.5	116.7	84	11	63% Up / 37% Down	Normal spaces	IES
	7000 lm/4ft	80CRI, 4000K	6899	52.9	130.4	84	11	72% Up / 28% Down	Normal spaces	IES
		80CRI, 3500K	6749	52.7	128.1	83	9	72% Up / 28% Down	Normal spaces	IES
		80CRI, 3000K	6461	52.7	122.6	84	11	72% Up / 28% Down	Normal spaces	IES
	5500 lm/4ft	80CRI, 4000K	5381	42.5	126.6	84	11	64% Up / 36% Down	Normal spaces	IES
		80CRI, 3500K	5262	42.3	124.4	83	9	64% Up / 36% Down	Normal spaces	IES
		80CRI, 3000K	5033	42.3	119.0	84	11	65% Up / 35% Down	Normal spaces	IES
	4600 lm/4ft	80CRI, 4000K	4604	35.2	130.8	84	11	75% Up / 25% Down	Critical spaces	IES
		80CRI, 3500K	4503	35.0	128.7	83	9	75% Up / 25% Down	Critical spaces	IES
		80CRI, 3000K	4314	35.0	123.3	84	11	75% Up / 25% Down	Critical spaces	IES
	3500 lm/4ft	80CRI, 4000K	3438	27.2	126.4	84	11	67% Up / 33% Down	Critical spaces	IES
		80CRI, 3500K	3362	27.1	124.1	83	9	67% Up / 33% Down	Critical spaces	IES
		80CRI, 3000K	3216	27.1	118.7	84	11	67% Up / 33% Down	Critical spaces	IES

AA - Acrylic Diffusers (60-70% Up)

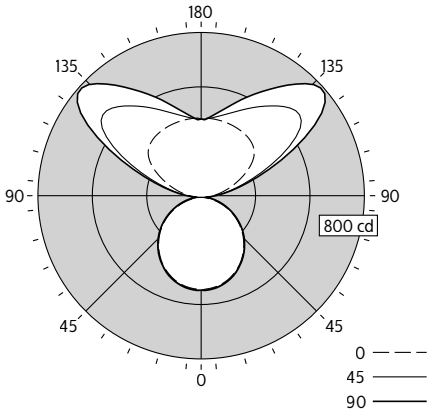

63% Up / 37% Down

VA - White Louvers / Acrylic Diffuser (60-70% Up)

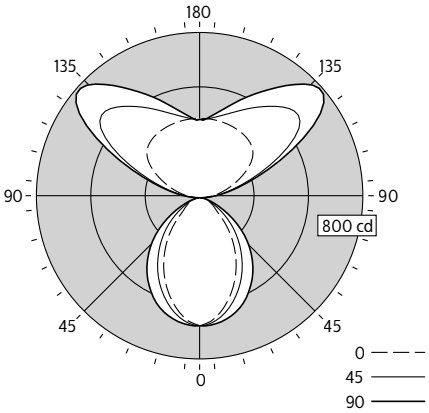

67% Up / 33% Down

*Candela shown is for 3500 lm/4ft, 3500K, 80 CRI configuration.

Sona linear suspended

Photometrics

Two Light Engines Upper & Lower - Direct/Indirect (7726)

(Click "IES" text to Download)

Optics	Lumen Package	Nominal CRI & CCT	Flux (lm)	Watts (W)	Efficacy (LPW)	CRI	R9	Distribution	RP-1 VDT	IES File
Acrylic Diffusers (50-60% Dn) AA	6700 lm/4ft	80CRI, 4000K	6891	53.3	129.3	84	11	50% Up / 50% Down	N/A	IES
		80CRI, 3500K	6736	53.1	126.9	83	9	50% Up / 50% Down	N/A	IES
		80CRI, 3000K	6429	53.1	121.1	84	11	51% Up / 49% Down	N/A	IES
	5500 lm/4ft	80CRI, 4000K	5725	45.3	126.4	83	6	40% Up / 60% Down	N/A	IES
		80CRI, 3500K	5595	45.2	123.8	82	3	40% Up / 60% Down	N/A	IES
		80CRI, 3000K	5331	45.2	117.9	82	2	41% Up / 59% Down	N/A	IES
	4600 lm/4ft	80CRI, 4000K	4532	34.5	131.4	84	11	51% Up / 49% Down	N/A	IES
		80CRI, 3500K	4430	34.4	128.8	83	9	51% Up / 49% Down	N/A	IES
		80CRI, 3000K	4228	34.4	122.9	84	11	51% Up / 49% Down	N/A	IES
White Louvers / Acrylic Diffuser (50-60% Dn) VA	6700 lm/4ft	80CRI, 4000K	6405	53.3	120.2	84	11	54% Up / 46% Down	Normal spaces	IES
		80CRI, 3500K	6261	53.1	117.9	83	9	54% Up / 46% Down	Normal spaces	IES
		80CRI, 3000K	5981	53.1	112.6	84	11	54% Up / 46% Down	Normal spaces	IES
	5500 lm/4ft	80CRI, 4000K	5239	45.3	115.7	83	6	44% Up / 56% Down	Normal spaces	IES
		80CRI, 3500K	5120	45.2	113.3	82	3	44% Up / 56% Down	Normal spaces	IES
		80CRI, 3000K	4884	45.2	108.1	82	2	44% Up / 56% Down	Normal spaces	IES
	4600 lm/4ft	80CRI, 4000K	4215	34.5	122.2	84	11	54% Up / 46% Down	Normal spaces	IES
		80CRI, 3500K	4121	34.4	119.8	83	9	54% Up / 46% Down	Normal spaces	IES
		80CRI, 3000K	3936	34.4	114.4	84	11	55% Up / 45% Down	Normal spaces	IES

AA - Acrylic Diffusers (50-60% Down)

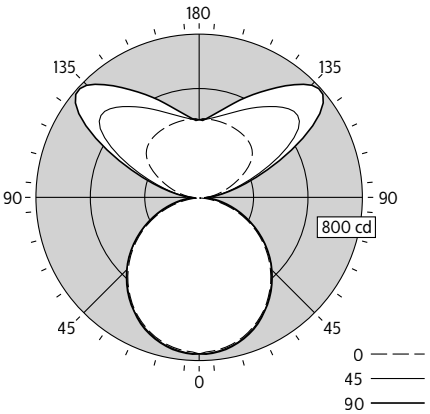

51% Up / 49% Down

VA - White Louvers / Acrylic Diffuser (50-60% Down)

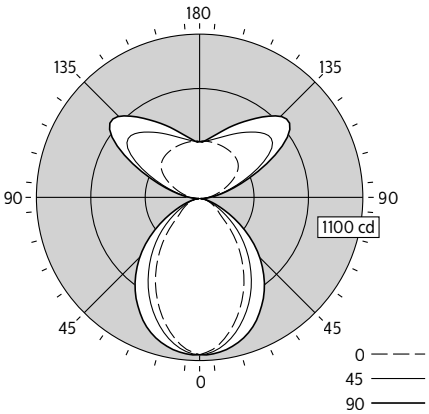

54% Up / 46% Down

*Candela shown is for 4600 lm/4ft, 3500K, 80 CRI configuration.

Sona linear suspended w/tunable white

Photometrics

One Light Engine Upper - Indirect (7703)

(Click "IES" text to Download)

Optics	Lumen Package	Nominal CRI & CCT	Flux (lm)	Watts (W)	Efficacy (LPW)	CRI	R9	Distribution	RP-1 VDT	Photometry report	IES File
Solid Housing / Acrylic Diffuser NA	4900lm/4ft	80CRI, 2700K	4997	36.3	137.5	82	8	100% Up / 0% Down	Critical spaces	PDF	IES
		80CRI, 3000K	4999	35.8	139.5	84	14	100% Up / 0% Down	Critical spaces		
		80CRI, 3500K	5002	35.1	142.4	86	23	100% Up / 0% Down	Critical spaces		
		80CRI, 4000K	5005	34.5	145.0	87	28	100% Up / 0% Down	Critical spaces		
		80CRI, 5000K	5009	33.7	148.8	87	26	100% Up / 0% Down	Critical spaces		
		80CRI, 6500K	5014	32.6	154.0	84	13	100% Up / 0% Down	Critical spaces		
	3400lm/4ft	80CRI, 2700K	3511	25.4	138.2	83	9	100% Up / 0% Down	Critical spaces	PDF	IES
		80CRI, 3000K	3509	25.2	139.4	84	16	100% Up / 0% Down	Critical spaces		
		80CRI, 3500K	3506	24.8	141.3	86	24	100% Up / 0% Down	Critical spaces		
		80CRI, 4000K	3503	24.5	142.9	87	28	100% Up / 0% Down	Critical spaces		
		80CRI, 5000K	3499	24.1	145.2	87	27	100% Up / 0% Down	Critical spaces		
		80CRI, 6500K	3494	23.6	148.3	84	12	100% Up / 0% Down	Critical spaces		

NA - Solid Housing / Acrylic Diffuser

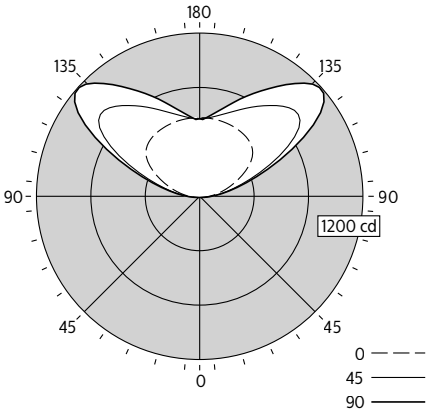

100% Up / 0% Down

*Candela shown is for 3400 lm/4ft, 3500K, 80 CRI configuration.

Sona linear suspended w/tunable white

Photometrics

One Light Engine Upper - Indirect/Direct (7705)

(Click "IES" text to Download)

Optics	Lumen Package	Nominal CRI & CCT	Flux (lm)	Watts (W)	Efficacy (LPW)	CRI	R9	Distribution	RP-1 VDT	Photometry report	IES File
Acrylic Diffusers (70% Up) AA	4900 lm/4ft	80CRI, 2700K	4665	36.3	128.4	83	9	68% Up / 32% Down	Normal spaces	PDF	IES
		80CRI, 3000K	4667	35.8	130.2	84	16	68% Up / 32% Down	Normal spaces		
		80CRI, 3500K	4670	35.1	132.9	86	24	68% Up / 32% Down	Normal spaces		
		80CRI, 4000K	4673	34.5	135.3	87	28	68% Up / 32% Down	Normal spaces		
		80CRI, 5000K	4676	33.7	138.9	87	27	68% Up / 32% Down	Normal spaces		
		80CRI, 6500K	4681	32.6	143.7	84	12	68% Up / 32% Down	Normal spaces		
	3400 lm/4ft	80CRI, 2700K	3278	25.4	129	83	10	68% Up / 32% Down	Critical spaces	PDF	IES
		80CRI, 3000K	3276	25.2	130.2	85	17	68% Up / 32% Down	Critical spaces		
		80CRI, 3500K	3273	24.8	131.9	87	25	68% Up / 32% Down	Critical spaces		
		80CRI, 4000K	3270	24.5	133.4	87	29	68% Up / 32% Down	Critical spaces		
		80CRI, 5000K	3267	24.1	135.6	87	28	68% Up / 32% Down	Critical spaces		
		80CRI, 6500K	3262	23.6	138.5	84	11	68% Up / 32% Down	Critical spaces		
White Louvers / Acrylic Diffuser (75% Up) VA	4900 lm/4ft	80CRI, 2700K	4540	36.3	125.0	83	9	74% Up / 26% Down	Normal spaces	PDF	IES
		80CRI, 3000K	4542	35.8	126.7	84	16	74% Up / 26% Down	Normal spaces		
		80CRI, 3500K	4545	35.1	129.4	86	24	74% Up / 26% Down	Normal spaces		
		80CRI, 4000K	4547	34.5	131.7	87	28	74% Up / 26% Down	Normal spaces		
		80CRI, 5000K	4551	33.7	135.2	87	27	74% Up / 26% Down	Normal spaces		
		80CRI, 6500K	4555	32.6	139.9	84	12	74% Up / 26% Down	Normal spaces		
	3400 lm/4ft	80CRI, 2700K	3190	25.4	125.6	83	10	74% Up / 26% Down	Critical spaces	PDF	IES
		80CRI, 3000K	3188	25.2	126.7	85	17	74% Up / 26% Down	Critical spaces		
		80CRI, 3500K	3185	24.8	128.4	87	25	74% Up / 26% Down	Critical spaces		
		80CRI, 4000K	3182	24.5	129.8	87	29	74% Up / 26% Down	Critical spaces		
		80CRI, 5000K	3179	24.1	131.9	87	28	74% Up / 26% Down	Critical spaces		
		80CRI, 6500K	3174	23.6	134.7	84	11	74% Up / 26% Down	Critical spaces		
Acrylic Diffusers + Down Kit (50% Down) AD	4900 lm/4ft	80CRI, 2700K	4243	36.3	116.8	83	9	50% Up / 50% Down	N/A	PDF	IES
		80CRI, 3000K	4245	35.8	118.4	84	16	50% Up / 50% Down	N/A		
		80CRI, 3500K	4248	35.1	120.9	86	24	50% Up / 50% Down	N/A		
		80CRI, 4000K	4250	34.5	123.1	87	28	50% Up / 50% Down	N/A		
		80CRI, 5000K	4254	33.7	126.4	87	27	50% Up / 50% Down	N/A		
		80CRI, 6500K	4258	32.6	130.7	84	12	50% Up / 50% Down	N/A		
	3400 lm/4ft	80CRI, 2700K	2981	25.4	117.3	83	10	50% Up / 50% Down	Normal spaces	PDF	IES
		80CRI, 3000K	2979	25.2	118.4	85	17	50% Up / 50% Down	Normal spaces		
		80CRI, 3500K	2977	24.8	120	87	25	50% Up / 50% Down	Normal spaces		
		80CRI, 4000K	2974	24.5	121.3	87	29	50% Up / 50% Down	Normal spaces		
		80CRI, 5000K	2971	24.1	123.3	87	28	50% Up / 50% Down	Normal spaces		
		80CRI, 6500K	2967	23.6	125.9	84	11	50% Up / 50% Down	Normal spaces		
White Louvers + Down Kit (50% Down) VD	4900 lm/4ft	80CRI, 2700K	4003	36.3	110.2	83	9	57% Up / 43% Down	Normal spaces	PDF	IES
		80CRI, 3000K	4005	35.8	111.7	84	16	57% Up / 43% Down	Normal spaces		
		80CRI, 3500K	4007	35.1	114.1	86	24	57% Up / 43% Down	Normal spaces		
		80CRI, 4000K	4010	34.5	116.1	87	28	57% Up / 43% Down	Normal spaces		
		80CRI, 5000K	4013	33.7	119.2	87	27	57% Up / 43% Down	Normal spaces		
		80CRI, 6500K	4017	32.6	123.3	84	12	57% Up / 43% Down	Normal spaces		
	3400 lm/4ft	80CRI, 2700K	2813	25.4	110.7	83	10	57% Up / 43% Down	Normal spaces	PDF	IES
		80CRI, 3000K	2811	25.2	111.7	85	17	57% Up / 43% Down	Normal spaces		
		80CRI, 3500K	2809	24.8	113.2	87	25	57% Up / 43% Down	Normal spaces		
		80CRI, 4000K	2806	24.5	114.5	87	29	57% Up / 43% Down	Normal spaces		
		80CRI, 5000K	2803	24.1	116.3	87	28	57% Up / 43% Down	Normal spaces		
		80CRI, 6500K	2799	23.6	118.8	84	11	57% Up / 43% Down	Normal spaces		

(following on page 14)

Sona linear suspended w/tunable white

Photometrics (cont'd from page 13)

One Light Engine Upper - Indirect/Direct (7705)

AA - Acrylic Diffusers (70% Up)

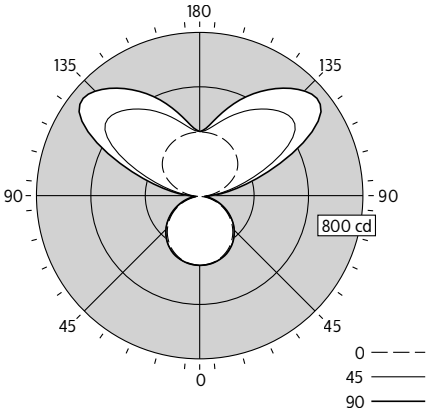

68% Up / 32% Down

VA - White Louvers / Acrylic Diffuser (75% Up)

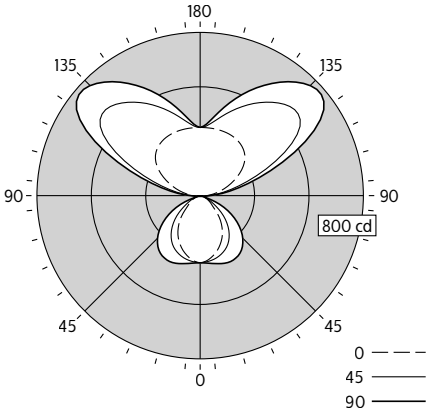

74% Up / 26% Down

AD - Acrylic Diffusers + Down Kit (50% Down)

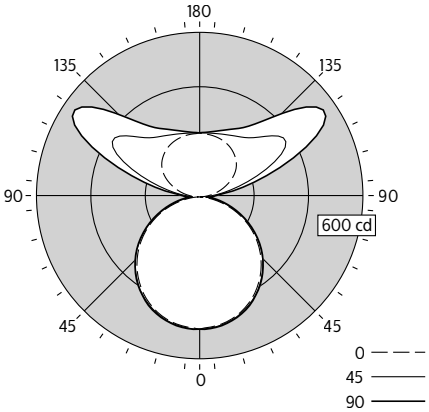

50% Up / 50% Down

VD - White Louvers + Down Kit (50% Down)

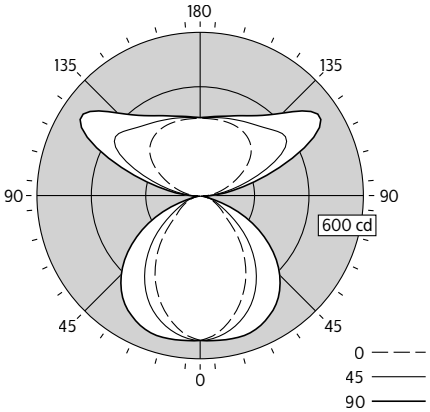

57% Up / 43% Down

***Candela shown is for 3100 lm/4ft, 2700K, 80 CRI configuration.**

Sona linear suspended w/tunable white

Photometrics

One Light Engine Lower - Direct (7711)

(Click "IES" text to Download)

Optics	Lumen Package	Nominal CRI & CCT	Flux (lm)	Watts (W)	Efficacy (LPW)	CRI	R9	Distribution	RP-1 VDT	Photometry report	IES File
Acrylic Diffuser / Solid Housing AN	3200 lm/4ft	80CRI, 2700K	3483	34.0	102.5	82	8	2% Up / 98% Down	N/A	PDF	IES
		80CRI, 3000K	3485	33.4	104.3	84	14	2% Up / 98% Down	N/A		
		80CRI, 3500K	3488	32.6	107.0	86	23	2% Up / 98% Down	N/A		
		80CRI, 4000K	3491	31.9	109.5	87	28	2% Up / 98% Down	N/A		
		80CRI, 5000K	3495	30.9	113.2	87	26	2% Up / 98% Down	N/A		
		80CRI, 6500K	3500	29.6	118.2	84	13	2% Up / 98% Down	N/A		
	2100 lm/4ft	80CRI, 2700K	2293	21.5	106.7	83	9	2% Up / 98% Down	N/A	PDF	IES
		80CRI, 3000K	2291	21.2	107.9	84	16	2% Up / 98% Down	N/A		
		80CRI, 3500K	2289	20.9	109.5	86	24	2% Up / 98% Down	N/A		
		80CRI, 4000K	2287	20.6	111	87	28	2% Up / 98% Down	N/A		
		80CRI, 5000K	2284	20.2	113.2	87	27	2% Up / 98% Down	N/A		
		80CRI, 6500K	2281	19.6	116.1	84	12	2% Up / 98% Down	N/A		
White Louvers / Solid Housing VN	3200 lm/4ft	80CRI, 2700K	3004	34.0	88.4	82	8	2% Up / 98% Down	Normal spaces	PDF	IES
		80CRI, 3000K	3006	33.4	89.9	84	14	2% Up / 98% Down	Normal spaces		
		80CRI, 3500K	3009	32.6	92.3	86	23	2% Up / 98% Down	Normal spaces		
		80CRI, 4000K	3011	31.9	94.4	87	28	2% Up / 98% Down	Normal spaces		
		80CRI, 5000K	3015	30.9	97.6	87	26	2% Up / 98% Down	Normal spaces		
		80CRI, 6500K	3019	29.6	102.0	84	13	2% Up / 98% Down	Normal spaces		
	2100 lm/4ft	80CRI, 2700K	1978	21.5	92.1	83	9	2% Up / 98% Down	Normal spaces	PDF	IES
		80CRI, 3000K	1977	21.2	93	84	16	2% Up / 98% Down	Normal spaces		
		80CRI, 3500K	1974	20.9	94.5	86	24	2% Up / 98% Down	Normal spaces		
		80CRI, 4000K	1973	20.6	95.8	87	28	2% Up / 98% Down	Normal spaces		
		80CRI, 5000K	1970	20.2	97.6	87	27	2% Up / 98% Down	Normal spaces		
		80CRI, 6500K	1967	19.6	100.1	84	12	2% Up / 98% Down	Normal spaces		
Acrylic Diffusers (80% Down) AG	3200 lm/4ft	80CRI, 2700K	3765	34.0	110.8	82	8	21% Up / 79% Down	N/A	PDF	IES
		80CRI, 3000K	3767	33.4	112.7	84	14	21% Up / 79% Down	N/A		
		80CRI, 3500K	3771	32.6	115.7	86	23	21% Up / 79% Down	N/A		
		80CRI, 4000K	3774	31.9	118.3	87	28	21% Up / 79% Down	N/A		
		80CRI, 5000K	3778	30.9	122.3	87	26	21% Up / 79% Down	N/A		
		80CRI, 6500K	3783	29.6	127.8	84	13	21% Up / 79% Down	N/A		
	2100 lm/4ft	80CRI, 2700K	2479	21.5	115.4	83	9	21% Up / 79% Down	N/A	PDF	IES
		80CRI, 3000K	2477	21.2	116.6	84	16	21% Up / 79% Down	N/A		
		80CRI, 3500K	2475	20.9	118.4	86	24	21% Up / 79% Down	N/A		
		80CRI, 4000K	2473	20.6	120	87	28	21% Up / 79% Down	N/A		
		80CRI, 5000K	2470	20.2	122.4	87	27	21% Up / 79% Down	N/A		
		80CRI, 6500K	2466	19.6	125.5	84	12	21% Up / 79% Down	N/A		
White Louvers / Acrylic Diffuser (80% Down) VG	3200 lm/4ft	80CRI, 2700K	3418	34.0	100.6	82	8	27% Up / 73% Down	Normal spaces	PDF	IES
		80CRI, 3000K	3420	33.4	102.3	84	14	27% Up / 73% Down	Normal spaces		
		80CRI, 3500K	3423	32.6	105.0	86	23	27% Up / 73% Down	Normal spaces		
		80CRI, 4000K	3426	31.9	107.4	87	28	27% Up / 73% Down	Normal spaces		
		80CRI, 5000K	3429	30.9	111.1	87	26	27% Up / 73% Down	Normal spaces		
		80CRI, 6500K	3434	29.6	116.0	84	13	27% Up / 73% Down	Normal spaces		
	2100 lm/4ft	80CRI, 2700K	2250	21.5	104.7	83	9	27% Up / 73% Down	Normal spaces	PDF	IES
		80CRI, 3000K	2248	21.2	105.8	84	16	27% Up / 73% Down	Normal spaces		
		80CRI, 3500K	2246	20.9	107.5	86	24	27% Up / 73% Down	Normal spaces		
		80CRI, 4000K	2244	20.6	108.9	87	28	27% Up / 73% Down	Normal spaces		
		80CRI, 5000K	2241	20.2	111.1	87	27	27% Up / 73% Down	Normal spaces		
		80CRI, 6500K	2238	19.6	113.9	84	12	27% Up / 73% Down	Normal spaces		

(following on page 16)

Sona linear suspended w/tunable white

Photometrics (cont'd from page 15)

One Light Engine Lower - Direct (7711)

AN - Acrylic Diffuser / Solid Housing

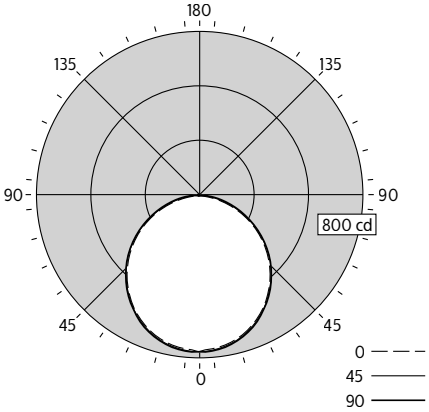

2% Up / 98% Down

VN - White Louvers / Solid Housing

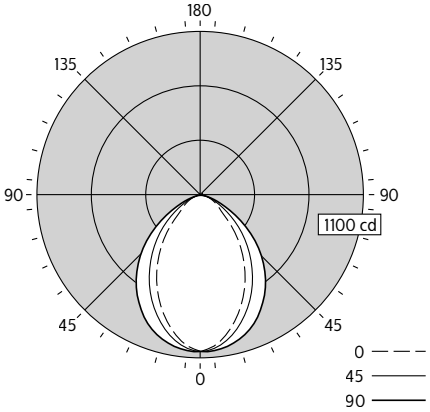

2% Up / 98% Down

AG - Acrylic Diffusers (80% Down)

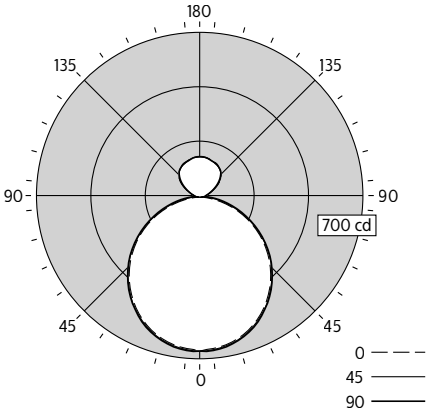

21% Up / 79% Down

VG - White Louvers / Acrylic Diffuser (80% Down)

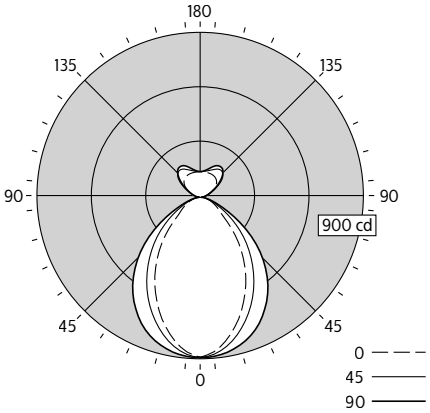

27% Up / 73% Down

***Candela shown is for 2100 lm/4ft, 2700K, 80 CRI configuration.**

Sona linear suspended w/tunable white

Photometrics

Two Light Engines Upper & Lower - Indirect/Direct (7725)

(Click "IES" text to Download)

Optics	Lumen Package	Nominal CRI & CCT	Flux (lm)	Watts (W)	Efficacy (LPW)	CRI	R9	Distribution	RP-1 VDT	Photometry report	IES File
Acrylic Diffusers (60-70% Up) AA	3500 lm/4ft	80CRI, 2700K	3681	28.9	127.2	82	8	63% Up / 37% Down	Normal spaces	PDF	IES
		80CRI, 3000K	3683	28.7	128.1	84	14	63% Up / 37% Down	Normal spaces		
		80CRI, 3500K	3686	28.5	129.4	86	23	64% Up / 36% Down	Normal spaces		
		80CRI, 4000K	3688	28.2	130.6	87	28	63% Up / 37% Down	Normal spaces		
		80CRI, 5000K	3692	27.9	132.3	87	26	63% Up / 37% Down	Normal spaces		
		80CRI, 6500K	3696	27.5	134.4	84	13	64% Up / 36% Down	Normal spaces		
White Louvers / Acrylic Diffuser (60-70% Up) VA	3500 lm/4ft	80CRI, 2700K	3490	28.9	120.6	82	8	67% Up / 33% Down	Critical spaces	PDF	IES
		80CRI, 3000K	3492	28.7	121.5	84	14	67% Up / 33% Down	Critical spaces		
		80CRI, 3500K	3494	28.5	122.7	86	23	67% Up / 33% Down	Critical spaces		
		80CRI, 4000K	3496	28.2	123.8	87	28	67% Up / 33% Down	Critical spaces		
		80CRI, 5000K	3499	27.9	125.3	87	26	67% Up / 33% Down	Critical spaces		
AA - Acrylic		80CRI, 6500K	3502	27.5	127.4	84	13	67% Up / 33% Down	Critical spaces		

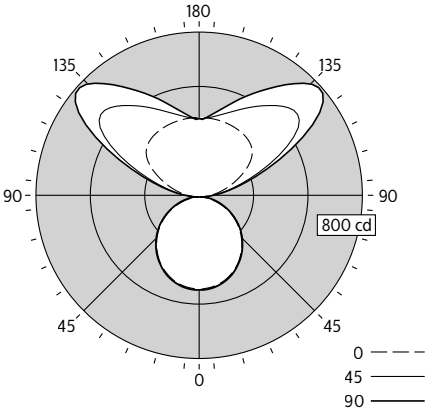

63% Up / 37% Down

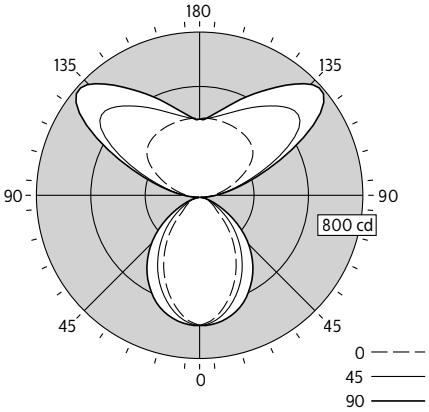

67% Up / 33% Down

*Candela shown is for 3500 lm/4ft, 2700K, 80 CRI configuration.

Sona linear suspended w/tunable white

Photometrics

Two Light Engines Upper & Lower - Direct/Indirect (7726)

(Click "IES" text to Download)

Optics	Lumen Package	Nominal CRI & CCT	Flux (lm)	Watts (W)	Efficacy (LPW)	CRI	R9	Distribution	RP-1 VDT	Photometry report	IES File
Acrylic Diffusers (50-60% Dn) AA	4600 lm/4ft	80CRI, 2700K	4587	37.6	121.9	83	9	51% Up / 49% Down	N/A	PDF	IES
		80CRI, 3000K	4584	37.3	123.0	84	16	51% Up / 49% Down	N/A		
		80CRI, 3500K	4580	36.8	124.5	86	24	51% Up / 49% Down	N/A		
		80CRI, 4000K	4577	36.4	125.8	87	28	51% Up / 49% Down	N/A		
		80CRI, 5000K	4572	35.8	127.8	87	27	51% Up / 49% Down	N/A		
		80CRI, 6500K	4566	35.0	130.4	84	12	51% Up / 49% Down	N/A		
White Louvers / Acrylic Diffuser (50-60% Dn) VA	4600 lm/4ft	80CRI, 2700K	4272	37.6	113.6	83	9	54% Up / 46% Down	Normal spaces	PDF	IES
		80CRI, 3000K	4269	37.3	114.5	84	16	54% Up / 46% Down	Normal spaces		
		80CRI, 3500K	4266	36.8	116	86	24	55% Up / 45% Down	Normal spaces		
		80CRI, 4000K	4262	36.4	117.2	87	28	54% Up / 46% Down	Normal spaces		
		80CRI, 5000K	4258	35.8	119	87	27	54% Up / 46% Down	Normal spaces		
		80CRI, 6500K	4252	35	121.4	84	12	55% Up / 45% Down	Normal spaces		

AA - Acrylic Diffusers (50-60% Down)

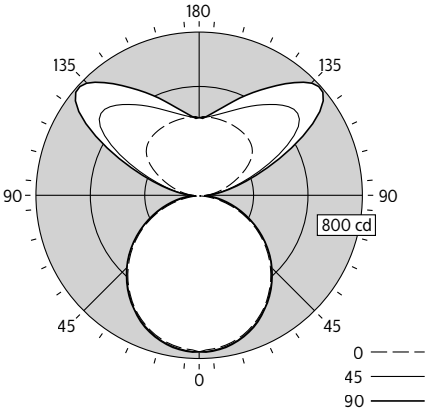

51% Up / 49% Down

VA - White Louvers / Acrylic Diffuser (50-60% Down)

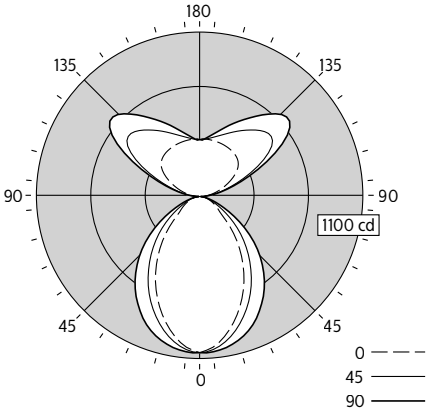

54% Up / 46% Down

*Candela shown is for 4600 lm/4ft, 2700K, 80 CRI configuration.

© 2025 Signify Holding. All rights reserved. The information provided herein is subject to change, without notice. Signify does not give any representation or warranty as to the accuracy or completeness of the information included herein and shall not be liable for any action in reliance thereon. The information presented in this document is not intended as any commercial offer and does not form part of any quotation or contract, unless otherwise agreed by Signify.

GENLYTE SOLUTIONS
a signify business

Signify North America Corp.
400 Crossing Blvd, Suite 600
Bridgewater, NJ 08807
Telephone: 800-555-0050

Signify Canada Ltd.
281 Hillmount Road,
Markham, ON, Canada L6C 2S3
Telephone: 800-668-9008

All trademarks are owned by Signify Holding or their respective owners.