LEDALITE

Linear

SyncLine

Suspended

SyncLine's slim design rivals that of high-end LED luminaires with performance that's in sync with your budget. SyncLine offers premium quality of light with AccuRender high efficacy CRI 90+. Options include Interact, AccuRender Tunable White and new BioUp high melanopic tunable technology to enhance your daily life.

SyncLine includes AccuRender technology for the highest color quality at the highest efficacy.

Project:

Location:

Cat.No:

Type:

Line ID: Qty:

Notes:

Ordering guide [11]

example: SL16L9353050AN08DEGNNNW, A1-24

Family	Version [10]	Distribution	Source	CRI/CCT [1,5]
SL SyncLine	0 Suspended - one light engine	1 Direct 3 Indirect 6 Direct / Indirect	L LED	950 CRI 90, 5000K 940 CRI 90, 4000K 935 CRI 90, 3500K 930 CRI 90, 3000K 927 CRI 90, 2700K 9T2 CRI 90, 2700-6500K 2ch Tunable White (confirm controls) BIO CRI 80+, 2700-5000K 2ch BioUp (confirm controls)
	1 Suspended - two light engines	6 Direct / Indirect		

Lumens [1]			Optics	Run Length
One light engine [10]	Total fixture lumens 80 8000 lm/4ft 70 7000 lm/4ft 60 6000 lm/4ft 50 5000 lm/4ft 40 4000 lm/4ft 30 3000 lm/4ft 20 2000 lm/4ft	NN D/I lumens determined by optics	AJ Acrylic Diffuser (100% Down, Max 4000lm/4ft) NA Dust Cover (100% Up, Max 7000lm/4ft) NB Open - No Dust Cover (100% Up, Max 7000lm/4ft) AA Acrylic Diffuser/Dust Cover (30% Down/70% Up) AB Acrylic Diffuser/Open - No Dust Cover (20% Down/80% Up) AD Acrylic Diffuser/Dust Cover (50% Down/50% Up) AE Acrylic Diffuser/Open - No Dust Cover (40% Down/60% Up) AG Acrylic Diffuser/Dust Cover (80% Down/20% Up, Max 5000lm/4ft)	04 4ft 06 6ft 08 8ft XX Continuous run in 2ft increments > 4ft (please specify)
Two light engines [10]	Lumens (Direct) 40 4000 lm/4ft 35 3500 lm/4ft 30 3000 lm/4ft 25 2500 lm/4ft 20 2000 lm/4ft 15 1500 lm/4ft 10 1000 lm/4ft	Lumens (Indirect) 70 7000 lm/4ft 60 6000 lm/4ft 50 5000 lm/4ft 40 4000 lm/4ft 30 3000 lm/4ft 20 2000 lm/4ft 10 1000 lm/4ft	AN Acrylic Diffuser Down/Freeform lens up D/I ratio determined by lumen packages	

Voltage [3]	Driver [3, 7]	Circuit [2, 8, 10]	Wiring Option [2, 3, 6, 8, 12]	System/Controls [4, 7, 9, 13]
D UNV 120-277V 3 347V	X Advance 0-10V (10% Dim) E Advance Xitanium 0-10V (1% Dim)	1 Single Circuit V Single Circuit + 1 Thru Wire (BP Trigger) F Single Circuit + 4 Thru Wires (Mains & Dimming) G Dual Circuit (Up/Dn) W Dual Circuit (Up/Dn) + 1 Thru Wire (BP Trigger)	N None B Battery Pack E Auxiliary Wiring G GTD (please specify voltage)	NN None
D UNV 120-277V	D Advance Xitanium DALI-2 (5% Dim) H Lutron EcoSystem LDE1 (<1% Dim, Fade-to-Black)			
D UNV 120-277V	S Advance Xitanium Sensor Ready (1% Dim)	1 Single Circuit V Single Circuit + 1 Thru Wire (BP Trigger)	N None B Battery Pack R UL924 Sensor Bypass Relay	NN None CS Interact wireless sensor with integral daylight & occupancy sensing, advanced grouping with dwell time SB Interact wireless sensor with occupancy, daylight, and environmental sensing capabilities
D UNV 120-277V	F Advance FlexTune Sensor Ready (1% Dim) 2 0-10V 2ch (1% Dim) 6 DALI-2 DT6 2ch (1% Dim) 8 DALI-2 DT8 2ch (1% Dim)	1 Single Circuit V Single Circuit + 1 Thru Wire (BP Trigger)	N None	NN None CS Interact wireless sensor with integral daylight & occupancy sensing, advanced grouping with dwell time

Finish	Option	Mount Type	Suspension
W Standard White B Black T Titanium Silver C Custom	N None V Variable Mount Housing	A1 Non-accessible ceiling, 0°-15° slope mount A2 T-Grid, fixed position mount A3 Non-accessible ceiling, 0°-90° slope mount A5 T-Grid 24" span mount (non tegular tile only) A6-1 T-Grid on-grid mount 15/16" (non tegular tile only) A6-2 T-Grid on-grid mount 9/16" (non tegular tile only) A6-3 T-Grid on-grid mount 9/16" x 5/16" (slot tee & tegular tile)	24 24" 48 48" 96 96" 144 144" 192 192" 240 240"

Footnotes 1-6 (hover here to view or see last page of spec sheet)
Footnotes 7-13 (hover here to view or see last page of spec sheet)

DLC Note: Not all product variations listed on this page are DLC qualified. To ensure that a specific model is qualified, visit www.designlights.org/search

quickship DLC LISTED DLC LISTED PREMIUM ETL LISTED interact ready.

SyncLine suspended

Options and dimensions

Standalone

Keep it simple with standalone modules, available in 3 standard lengths (consult Ledalite for custom lengths).

4ft

6ft

8ft

Continuous run

Create continuous runs in 2ft increments with 4,6 & 8ft modules.

Optical configurations

SyncLine is available with one or two light engines for combined or independent Direct/Indirect control.

One light engine

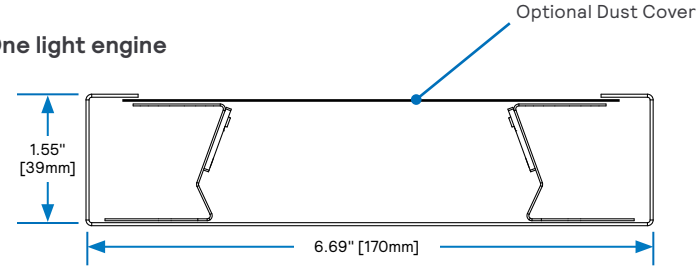

Two light engines

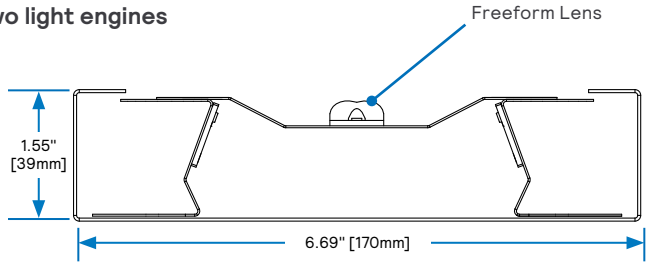

Finish options

White (W)

Titanium Silver (T)

Black (B)

Custom (C)

SyncLine suspended

Options and dimensions

Top View

Variable Mount Option

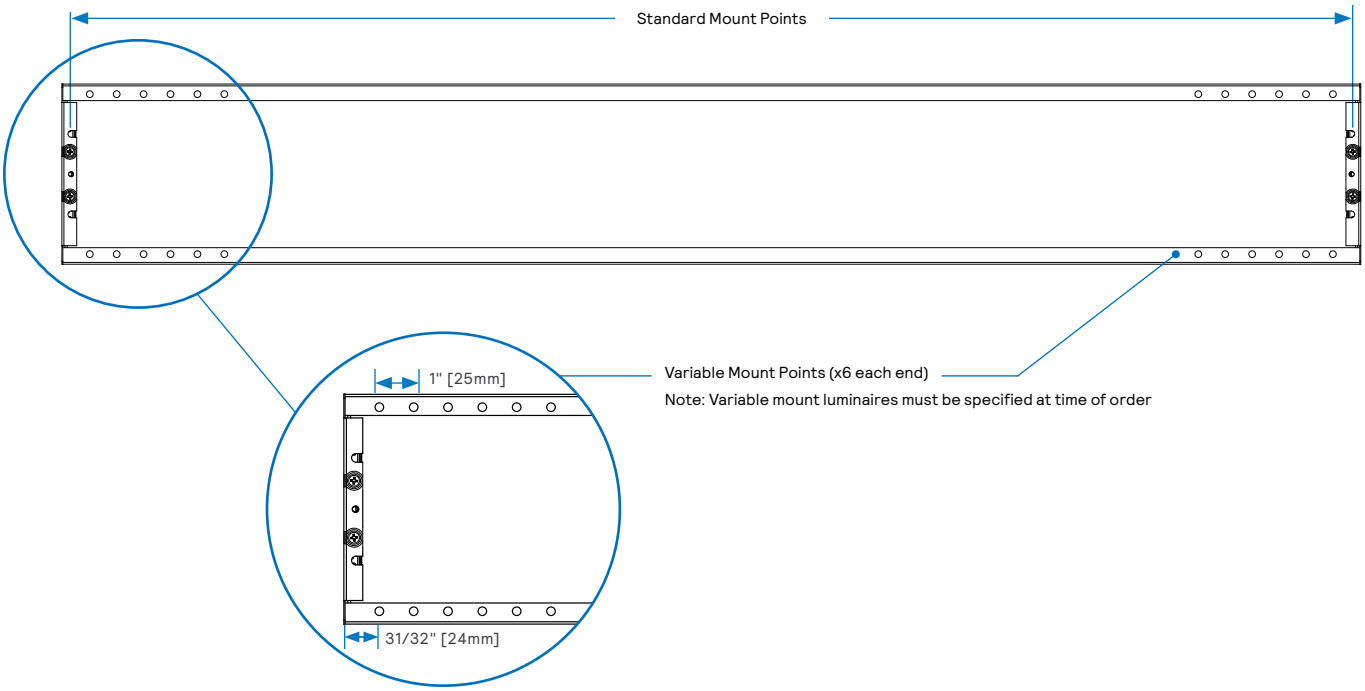

Bottom View

4ft Single Window

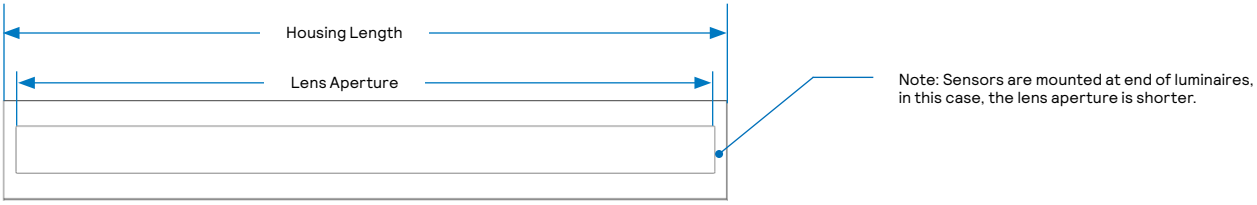

6ft & 8ft Dual Windows

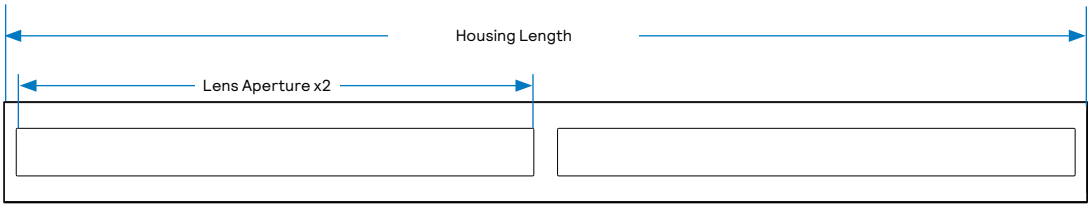

Nominal	Housing Length	Lens Aperture	Standard Mounting Points	Endcap Thickness
4ft	**48.18"** [1224mm]	46.5" [1180mm]	47.7" [1210mm]	0.04" [1mm]
6ft	**72.0"** [1829mm]	34.3" [872mm] each	71.5" [1815mm]	0.04" [1mm]
8ft	**96.0"** [2438mm]	46.3" [1177mm] each	95.5" [2425mm]	0.04" [1mm]

SyncLine suspended

Specifications

Optical System

One Light Engine: Lateral-facing LED arrays deliver light into both the upper and lower hemispheres, giving a highly efficient wide, homogeneous upper batwing distribution and a lower lambertian distribution.

Five distributions are available from fully Direct to fully Indirect with three Direct/Indirect ratios in between.

Two Light Engines: Lateral-facing and upward facing LED arrays are designed into separate chambers and allow a multitude of direct/indirect lumen package combinations for the ultimate in distribution control.

An optional dust cover is available in both one and two light engine models.

Housing

Precision die-formed, 20 gauge cold-rolled steel housing.

Endcaps

Flat, die-formed, 20 gauge cold-rolled steel endcaps.

Finish

Housing and endcaps are coated with a high quality electrostatically applied, thermally cured polyester powder coat finish. Available in standard Matte White, Black or Titanium Silver. SyncLine can also be specified in any custom color upon request for a one-time setup charge. Optional sensors default color is white. Fixtures with black finish have black sensors (consult factory for other combinations).

Mounting

Suspended: Rapid installation sling mount at joints and ends. High strength aircraft cable and tamper-resistant gripper provide unlimited vertical adjustment and are independently tested to stringent safety standards. An optional variable mount housing is available giving 6" of linear mounting variability in 1" increments at each end of the luminaire, to clear ceiling obstructions during installation.

Joints

Self-aligning joining system with hands-free pre-joining wire access.

Weight

Maximum 2.6 lbs/ft.

Electrical

Fixtures are factory pre-wired to section ends with quick-wire connectors and tested for all circuits and backup battery packs. LED boards, drivers, sensors and battery packs are easily field replaceable with access from below the ceiling.

Power drops can be specified in white, black or clear cord options.

Standard Drivers

Advance 0-10V, 10% Dimming.
Advance Xitanium 0-10V, 1% Dimming.
Advance Xitanium DALI-2, 5% Dimming.
Advance Xitanium Sensor Ready, 1% Dimming.
Lutron EcoSystem LDE1, 1% Dimming with Soft-On and Fade-to-Black.

2ch Tunable Drivers

Advance FlexTune Sensor Ready, 1% Dimming.
0-10V, 1% Dimming.
DALI-2 DT6 or DT8, 1% Dimming.

Class 2 rated output. Consult Ledalite for other available drivers.

Standard Battery Packs

Bodine Battery Pack, 90 min, 10W, Class 2 rated output.
Lumen output = 10W x luminaire efficacy x 1.1 Typical output ~1300lm.

Lumen Maintenance

LEDs have been tested by the manufacturer in accordance with IESNA

LM-80-15. At an ambient temperature of 25°C, the LED lumen maintenance expectation according to IES TM-21-11 is:

L_{80} (10k) > 60,000 hours (Reported methodology).

Source Color

LEDs rated for color rendering of:
CRI $R_a \geq 90$, $R_9 \geq 50$, $G_a \geq 97$, $C_9 \geq 90$
IES TM-30-18 : $R_f \geq 90$, $R_{f,h1} \geq 89$, $R_g \geq 99$, $R_{cs,h1} \geq -5\%$

SPD data available upon request

Fixture to fixture color accuracy within:
3 SDCM for Static White & Tunable White luminaires

Approvals

Certified to UL, IES & CSA Standards.

Certain product configurations are DesignLights Consortium qualified. Please see the DLC QPL list for exact catalog numbers under DLC Family Code RRRXMQ.

www.designlights.org/QPL

Select SyncLine configurations contribute toward satisfying features L02, L03, L04, L07, L08, and L09 under the WELL v2 Building Standard®.

Environment

Rated for dry or damp locations in operating ambient temperatures of 0-25°C (32-77°F).

Many luminaire components, such as reflectors, refractors, lenses, and LEDs are made from various types of plastics which can be adversely affected by airborne contaminants. If sulfur-based chemicals, petroleum-based products, cleaning solutions, or other contaminants are expected in the intended area of use, consult factory for compatibility. Damage caused by sulfur, chlorine, petroleum-based solution or other contaminants are not covered under warranty. Not suitable for natatorium environments.

Warranty

Five-year luminaire limited warranty including LED boards and driver:
www.signify.com/warranties

QuickShip

10-day QuickShip available for most configurations upon request. More information available at:
www.signify.com/en-us/brands/ledalite/quickship

SyncLine suspended

Wireless Controls Options

Interact sensor for Foundation, Advanced & Enterprise tiers (CS):

- CS is a connected sensor with integral occupancy and daylight sensing and supports wireless mesh connectivity.
- The sensor works in the Foundation mode when configured without a gateway or in an Interact Advanced or Enterprise mode if a compatible gateway is used.
- Interact includes an App, a portal and a broad portfolio of wireless luminaires, lamps and retrofit kits all working on the same system.
- Startup is implemented via Interact App (Android or iPhone) & Bluetooth connectivity. The App provides flexibility to choose between a gateway or non gateway mode for setup.
- Setup with the gateway requires wired internet access to the gateway. It is possible to add a gateway at a later point.
- Prepare project configuration steps remotely and use IRT9015 remote onsite to identify and group devices together.
- Compatible with UID8451/10 wireless dimmer switch, SWS200 wireless scene switch, wireless Occ sensor (OCC SENSOR IA CM IP42 WH 10/1) and wireless Day/Occ sensor (OCC MULTI SENSOR IA CM WH 10/1).
- For more information on Interact visit: www.interact-lighting.com/interactproscalablesystem

Emergency Options (R):

- Power Sensing (Factory default) – Recommended
- UL924 option requires unswitched power sense line, absence of voltage on the normal circuit triggers luminaire to 100% output.
- Power Interruption Detection (Field option)
- Detects AC power interruption >30ms triggers 90 minute emergency mode with luminaire at 100% output.

Interact sensor bundles for Enterprise tier (SB):

- SB option, in addition to occupancy and daylight sensing, supports advanced IoT capabilities such as people estimation analysis, desk level temperature & humidity sensing, noise classification, and BLE beacon.
- Compatible with UID8451/10 wireless dimmer switch, SWS200 wireless scene switch, wireless Occ sensor (OCC SENSOR IA CM IP42 WH 10/1) and wireless Day/Occ sensor (OCC MULTI SENSOR IA CM WH 10/1).
- Use Interact software and insights to increase building efficiency, achieve building wide integration and optimize space through occupancy analytics.
- Requires compatible Gateway and internet connectivity for commissioning. For more information, visit: www.interact-lighting.com/office

Wired Controls Options

Tunable White & BioUp:

- Tunable White & BioUp options are available with Interact Pro wireless or with 2ch 0-10V or DALI-2 (DT6 or DT8) wired drivers. Please enquire about options such as Lutron T Series or DMX control (extended lead times may apply).
- Signify tunable white solutions are designed to help maximize the influence of lighting on your daily life.
- Dynamic behaviors via scheduled lighting recipes mimicking daylight patterns or supporting biorhythms.
- Scene setting via lighting pre-sets based on various combinations of lighting color temperature and intensity.

3rd Party Sensors:

- Third party sensors also available, please enquire about options for Lutron Athena, Vive, or others.

Interact Pro scalable sensor option codes across Genlyte product lines

	Evokit	Day-Brite	Ledalite	Lightolier
Zigbee + Bluetooth + Sensing	SWZCS	SWZCS	CS	SBA accessory (external)
Zigbee + Bluetooth	RADIO	RADIO	RA	RA
Zigbee + Bluetooth + Sensing + Environmental data	IAOSB	IAOSB	SB	SB
Zigbee + Highbay + Sensing	-	SWZCSH	-	-

SyncLine suspended

Functionalities overview

	The three tiers of Interact		
	Standalone	Gateway	Gateway + IoT
Dimming, grouping, and zoning	✓	✓	✓
Bluetooth and ZigBee enabled	✓	✓	✓
Motion sensing and daylight harvesting	✓	✓	✓
Integration with 0-10V and phase dimming fixtures	✓	✓	✓
Code compliance	✓	✓	✓
Granular dimming and dwell time	✓	✓	✓
New Correlated color temperature (CCT) tuning by switch	✓	✓	✓
New Support for sensor-based Tunable White luminaires	✓	✓	✓
Energy reporting and monitoring		✓	✓
Scheduling		✓	✓
Demand response		✓	✓
BMS integration (BACnet)			✓
Floor plan visualization			✓
IoT sensors for wellness			✓
IoT Apps for productivity			✓

Currently supported maximum system size

To be able to design the lighting system correctly for the customer, it is important to know the prime characteristics of the system, its possibilities and limitations.

System level	
Total number of gateways	Unlimited
Total number of devices	200 per network
• luminaires with integrated sensors	150
• smart TLEDS	150
Total number of ZGP devices (sensors and switches)	50
• sensors	30
• switches	50
• zones and groups	64
Group level	
Recommended number of lights	40 (recommended 25)
Number of ZGP devices	5
Number of scenes	16

Interact system architecture for office, education, healthcare, retail, industrial and parking applications

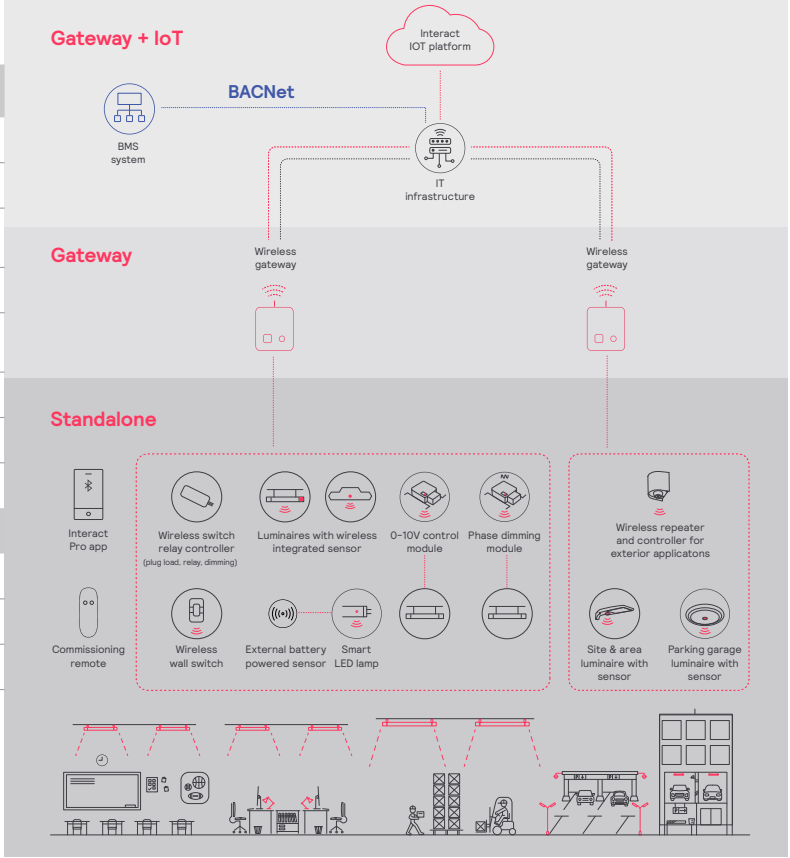

SyncLine suspended

Colorimetry

SyncLine (SLxx) BioUp

Nominal CRI &CCT		CRI 90+, 2700K	CRI 90+, 3000K	CRI 80+, 3500K	CRI 80+, 4000K	CRI 80+, 5000K
CIE 013.3-1995 [1]	CRI R_a	94	91	88	86	82
	R_9	62	70	75	76	70
	G_a	100	98	97	95	92
	C_9	94	95	96	96	95
IES TM-30-18 [2]	R_f	92	90	87	84	82
	$R_{f,h1}$	91	90	88	86	83
	R_g	101	98	96	94	92
	$R_{cs,h1}$	-5%	-5%	-5%	-5%	-6%
MDER [3]		0.44	0.59	0.72	0.82	0.97

SyncLine (SLxx) AccuRender Tunable White

Nominal CRI &CCT		CRI 90+, 2700K	CRI 90+, 3000K	CRI 90+, 3500K	CRI 90+, 4000K	CRI 90+, 5000K	CRI 90+, 6500K
CIE 013.3-1995 [1]	CRI R_a	94	94	95	95	92	92
	R_9	54	63	72	76	75	62
	G_a	98	100	100	100	98	95
	C_9	92	94	95	96	95	92
IES TM-30-18 [2]	R_f	92	92	91	91	90	87
	$R_{f,h1}$	90	91	91	91	89	85
	R_g	99	100	100	99	99	96
	$R_{cs,h1}$	-6%	-5%	-4%	-4%	-5%	-6%
MDER [3]		0.45	0.53	0.63	0.71	0.83	0.97

SyncLine (SLxx) AccuRender Static White

Nominal CRI &CCT		CRI 90+, 2700K	CRI 90+, 3000K	CRI 90+, 3500K	CRI 90+, 4000K	CRI 90+, 5000K
CIE 013.3-1995 [1]	CRI R_a	94	93	93	93	93
	R_9	55	57	59	64	68
	G_a	99	99	99	99	99
	C_9	93	93	93	93	94
IES TM-30-18 [2]	R_f	92	91	91	91	90
	$R_{f,h1}$	90	90	90	91	89
	R_g	100	100	99	100	100
	$R_{cs,h1}$	-6%	-5%	-6%	-5%	-5%
MDER [3]		0.45	0.51	0.58	0.65	0.81

1. Color Rendering Index (CRI Ra) and Strong Red (R9) are calculated in accordance with CIE 013.3-1995. Color Gamut index (Ga) and red chroma Index (C9) are CIE based properties using the Global Lighting Association's calculation tool.
2. Fidelity Index (Rf), Red Fidelity Index (Rf,h1), Gamut Index (Rg), and Red Local Chroma Shift (Rcs,h1) are calculated in accordance with IES TM-30-18.
3. Melanopic Daylight Efficacy Ratio (MDER) is the measure for "spectral melanopic efficiency" as defined in CIE S 026-2018.

SyncLine suspended

Photometry

Direct (SL01) One Light Engine – AJ (100% Down)

Click “PDF” or “IES” text to download

Nominal CRI &CCT				CRI 90+, 2700K					CRI 90+, 3000K					CRI 90+ [4], 3500K					CRI 90+ [4], 4000K					CRI 90+ [4], 5000K					CRI 90+, 6500K				
Nominal Lumen Package (lm/4ft)			Watts (W)[3]	Flux (lm/4ft)[1]	Efficacy (LPW)[1]	UGR[2]	Photometry Report	IES File	Flux (lm/4ft)[1]	Efficacy (LPW)[1]	UGR[2]	Photometry Report	IES File	Flux (lm/4ft)[1]	Efficacy (LPW)[1]	UGR[2]	Photometry Report	IES File	Flux (lm/4ft)[1]	Efficacy (LPW)[1]	UGR[2]	Photometry Report	IES File	Flux (lm/4ft)[1]	Efficacy (LPW)[1]	UGR[2]	Photometry Report	IES File	Flux (lm/4ft)[1]	Efficacy (LPW)[1]	UGR[2]	Photometry Report	IES File
BioUp	4000	100% DN	39.1	4,001	105.8	25.3	PDF	IES	4,001	103.9	25.3	PDF	IES	4,001	102.3	25.3	PDF	IES	4,001	101.1	25.3	PDF	IES	4,001	99.4	25.3	PDF	IES	-	-	-	-	-
	3000	100% DN	28.4	3,001	108.7	24.3	PDF	IES	3,001	107.2	24.3	PDF	IES	3,001	105.7	24.3	PDF	IES	3,001	104.6	24.3	PDF	IES	3,001	103.0	24.3	PDF	IES	-	-	-	-	-
Tunable White	4000	100% DN	37.6	3,999	103.3	25.3	PDF	IES	3,999	104.7	25.3	PDF	IES	3,999	106.4	25.3	PDF	IES	3,999	107.8	25.3	PDF	IES	3,999	110.0	25.3	PDF	IES	3,999	112.6	25.3	PDF	IES
	3000	100% DN	27.9	3,000	104.9	24.3	PDF	IES	3,000	106.0	24.3	PDF	IES	3,000	107.7	24.3	PDF	IES	3,000	109.0	24.3	PDF	IES	3,000	111.2	24.3	PDF	IES	3,000	113.7	24.3	PDF	IES
Static White	4000	100% DN	36.1	3,692	102.3	25.0	PDF	IES	3,832	106.1	25.2	PDF	IES	3,995	110.7	25.3	PDF	IES	4,003	110.9	25.3	PDF	IES	4,185	115.9	25.5	PDF	IES	-	-	-	-	-
	3000	100% DN	27.3	2,766	101.3	24.0	PDF	IES	2,870	105.1	24.2	PDF	IES	2,992	109.6	24.3	PDF	IES	2,993	109.6	24.3	PDF	IES	3,139	115.0	24.5	PDF	IES	-	-	-	-	-
	2000	100% DN	18.4	1,847	100.4	22.6	PDF	IES	1,915	104.1	22.8	PDF	IES	1,998	108.6	22.9	PDF	IES	1,994	108.4	22.9	PDF	IES	2,099	114.1	23.1	PDF	IES	-	-	-	-	-

1. 4ft Luminaire photometry has been conducted in accordance with IES LM-79-08. IES files can be downloaded by clicking the links in the table above, or online at ledalite.com. Luminaires with finishes other than standard white may result in a drop in flux and efficacy.
2. Unified Glare Ratio (UGR) is calculated in accordance with CIE 117-1995. Reference conditions of 4Hx8Hx1H and reflectances of 70/50/20% have been applied using the procedure described in CIE 190-2010.
3. Input power stated at 3500K. BioUp & Tunable White, stated with Advance FlexTune SR driver & Interact Pro scalable wireless sensor, data may vary with other drivers.
4. BioUp delivers CRI 90+, 2700K-3000K, and CRI 80+, >3000K-5000K.

One Light Engine – AJ (100% Down)
Spacing Criteria: 1.20/1.21

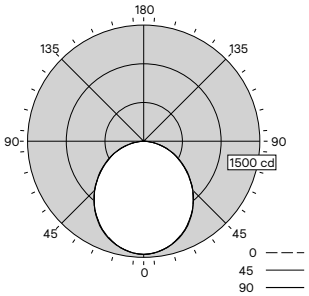

99% Down / 1% Up

Candela plots shown are for 4000lm/4ft, CRI 90, 3500K configurations.

SyncLine suspended

Photometry

Indirect (SL03) One Light Engine – NA (100% Up)

Click "PDF" or "IES" text to download

Nominal CRI &CCT				CRI 90+, 2700K					CRI 90+, 3000K					CRI 90+, 3500K					CRI 90+, 4000K					CRI 90+, 5000K					CRI 90+, 6500K				
Nominal Lumen Package (lm/4ft)			Watts (W)[3]	Flux (lm/4ft)[1]	Efficacy (LPW)[1]	UGR[2]	Photometry Report	IES File	Flux (lm/4ft)[1]	Efficacy (LPW)[1]	UGR[2]	Photometry Report	IES File	Flux (lm/4ft)[1]	Efficacy (LPW)[1]	UGR[2]	Photometry Report	IES File	Flux (lm/4ft)[1]	Efficacy (LPW)[1]	UGR[2]	Photometry Report	IES File	Flux (lm/4ft)[1]	Efficacy (LPW)[1]	UGR[2]	Photometry Report	IES File	Flux (lm/4ft)[1]	Efficacy (LPW)[1]	UGR[2]	Photometry Report	IES File
Tunable White	5000	100% UP	40.2	4,755	114.6	N/A	PDF	IES	4,755	116.2	N/A	PDF	IES	4,755	118.3	N/A	PDF	IES	4,755	120.1	N/A	PDF	IES	4,755	122.9	N/A	PDF	IES	4,755	126.2	N/A	PDF	IES
Tunable White	4000	100% UP	31.1	3,806	118.9	N/A	PDF	IES	3,806	120.4	N/A	PDF	IES	3,806	122.5	N/A	PDF	IES	3,806	124.2	N/A	PDF	IES	3,806	127.0	N/A	PDF	IES	3,806	130.1	N/A	PDF	IES
Static White	7000	100% UP	55.3	6,126	110.8	N/A	PDF	IES	6,357	115.0	N/A	PDF	IES	6,656	120.4	N/A	PDF	IES	6,674	120.7	N/A	PDF	IES	6,990	126.4	N/A	PDF	IES	-	-	-	-	-
Static White	6000	100% UP	46.3	5,259	113.6	N/A	PDF	IES	5,463	118.0	N/A	PDF	IES	5,711	123.3	N/A	PDF	IES	5,724	123.6	N/A	PDF	IES	5,997	129.5	N/A	PDF	IES	-	-	-	-	-
Static White	5000	100% UP	38.1	4,395	115.4	N/A	PDF	IES	4,567	119.9	N/A	PDF	IES	4,765	125.1	N/A	PDF	IES	4,782	125.5	N/A	PDF	IES	5,001	131.3	N/A	PDF	IES	-	-	-	-	-
Static White	4000	100% UP	30.2	3,518	116.5	N/A	PDF	IES	3,655	121.0	N/A	PDF	IES	3,809	126.1	N/A	PDF	IES	3,826	126.7	N/A	PDF	IES	3,995	132.3	N/A	PDF	IES	-	-	-	-	-
Static White	3000	100% UP	23.0	2,632	114.4	N/A	PDF	IES	2,733	118.8	N/A	PDF	IES	2,848	123.8	N/A	PDF	IES	2,857	124.2	N/A	PDF	IES	2,984	129.7	N/A	PDF	IES	-	-	-	-	-
Static White	2000	100% UP	15.4	1,764	114.5	N/A	PDF	IES	1,830	118.8	N/A	PDF	IES	1,910	124.0	N/A	PDF	IES	1,909	124.0	N/A	PDF	IES	1,999	129.8	N/A	PDF	IES	-	-	-	-	-

Indirect (SL03) One Light Engine – NB (100% Up)

Click "PDF" or "IES" text to download

Nominal CRI &CCT				CRI 90+, 2700K					CRI 90+, 3000K					CRI 90+, 3500K					CRI 90+, 4000K					CRI 90+, 5000K					CRI 90+, 6500K				
Nominal Lumen Package (lm/4ft)			Watts (W)[3]	Flux (lm/4ft)[1]	Efficacy (LPW)[1]	UGR[2]	Photometry Report	IES File	Flux (lm/4ft)[1]	Efficacy (LPW)[1]	UGR[2]	Photometry Report	IES File	Flux (lm/4ft)[1]	Efficacy (LPW)[1]	UGR[2]	Photometry Report	IES File	Flux (lm/4ft)[1]	Efficacy (LPW)[1]	UGR[2]	Photometry Report	IES File	Flux (lm/4ft)[1]	Efficacy (LPW)[1]	UGR[2]	Photometry Report	IES File	Flux (lm/4ft)[1]	Efficacy (LPW)[1]	UGR[2]	Photometry Report	IES File
Tunable White	5000	100% UP	40.2	4,999	120.5	N/A	PDF	IES	4,999	122.2	N/A	PDF	IES	4,999	124.4	N/A	PDF	IES	4,999	126.2	N/A	PDF	IES	4,999	129.3	N/A	PDF	IES	4,999	132.7	N/A	PDF	IES
Tunable White	4000	100% UP	31.1	4,001	125.0	N/A	PDF	IES	4,001	126.6	N/A	PDF	IES	4,001	128.8	N/A	PDF	IES	4,001	130.5	N/A	PDF	IES	4,001	133.5	N/A	PDF	IES	4,001	136.8	N/A	PDF	IES
Static White	7000	100% UP	55.3	6,439	116.4	N/A	PDF	IES	6,682	120.8	N/A	PDF	IES	6,997	126.5	N/A	PDF	IES	7,016	126.9	N/A	PDF	IES	7,348	132.9	N/A	PDF	IES	-	-	-	-	-
Static White	6000	100% UP	46.3	5,529	119.4	N/A	PDF	IES	5,743	124.0	N/A	PDF	IES	6,003	129.7	N/A	PDF	IES	6,017	130.0	N/A	PDF	IES	6,304	136.2	N/A	PDF	IES	-	-	-	-	-
Static White	5000	100% UP	38.1	4,621	121.3	N/A	PDF	IES	4,801	126.0	N/A	PDF	IES	5,009	131.5	N/A	PDF	IES	5,027	131.9	N/A	PDF	IES	5,258	138.0	N/A	PDF	IES	-	-	-	-	-
Static White	4000	100% UP	30.2	3,699	122.5	N/A	PDF	IES	3,842	127.2	N/A	PDF	IES	4,004	132.6	N/A	PDF	IES	4,022	133.2	N/A	PDF	IES	4,199	139.0	N/A	PDF	IES	-	-	-	-	-
Static White	3000	100% UP	23.0	2,767	120.3	N/A	PDF	IES	2,873	124.9	N/A	PDF	IES	2,993	130.1	N/A	PDF	IES	3,004	130.6	N/A	PDF	IES	3,136	136.3	N/A	PDF	IES	-	-	-	-	-
Static White	2000	100% UP	15.4	1,855	120.5	N/A	PDF	IES	1,924	124.9	N/A	PDF	IES	2,007	130.3	N/A	PDF	IES	2,007	130.3	N/A	PDF	IES	2,101	136.4	N/A	PDF	IES	-	-	-	-	-

1. 4ft Luminaire photometry has been conducted in accordance with IES LM-79-08. IES files can be downloaded by clicking the links in the table above, or online at ledalite.com. Luminaires with finishes other than standard white may result in a drop in flux and efficacy.
2. Unified Glare Ratio (UGR) is calculated in accordance with CIE 117-1995. Reference conditions of 4Hx8Hx1H and reflectances of 70/50/20% have been applied using the procedure described in CIE 190-2010.
3. Input power stated at 3500K. BioUp & Tunable White, stated with Advance FlexTune SR driver & Interact Pro scalable wireless sensor, data may vary with other drivers.

One Light Engine – NA (100% Up)

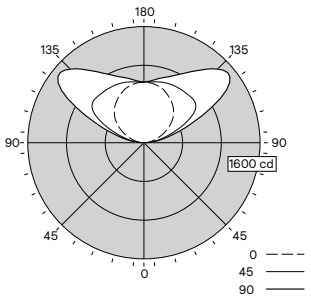

0% Down / 100% Up

One Light Engine – NB (100% Up)

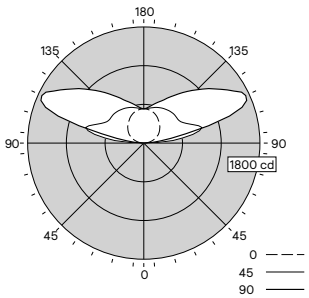

0% Down / 100% Up

Candela plots shown are for 4000lm/4ft, CRI 90, 3500K configurations.

SyncLine suspended

Photometry

Direct/Indirect (SL06) One Light Engine – AA (30% Down/70% Up)

Click "PDF" or "IES" text to download

Nominal CRI &CCT				CRI 90+, 2700K					CRI 90+, 3000K					CRI 90+ [4], 3500K					CRI 90+ [4], 4000K					CRI 90+ [4], 5000K					CRI 90+, 6500K				
Nominal Lumen Package (lm/4ft)			Watts (W)[3]	Flux (lm/4ft)[1]	Efficacy (LPW)[1]	UGR[2]	Photometry Report	IES File	Flux (lm/4ft)[1]	Efficacy (LPW)[1]	UGR[2]	Photometry Report	IES File	Flux (lm/4ft)[1]	Efficacy (LPW)[1]	UGR[2]	Photometry Report	IES File	Flux (lm/4ft)[1]	Efficacy (LPW)[1]	UGR[2]	Photometry Report	IES File	Flux (lm/4ft)[1]	Efficacy (LPW)[1]	UGR[2]	Photometry Report	IES File	Flux (lm/4ft)[1]	Efficacy (LPW)[1]	UGR[2]	Photometry Report	IES File
BioUp	5000	30% DN/ 70% UP	39.4	5,000	131.2	16.2	PDF	IES	5,000	128.8	16.2	PDF	IES	5,000	126.8	16.2	PDF	IES	5,000	125.3	16.2	PDF	IES	5,000	123.2	16.2	PDF	IES	-	-	-	-	-
BioUp	4000	30% DN/ 70% UP	30.7	4,000	134.2	15.4	PDF	IES	4,000	132.2	15.4	PDF	IES	4,000	130.3	15.4	PDF	IES	4,000	128.9	15.4	PDF	IES	4,000	126.9	15.4	PDF	IES	-	-	-	-	-
Tunable White	5000	30% DN/ 70% UP	37.9	5,001	128.2	16.2	PDF	IES	5,001	129.8	16.2	PDF	IES	5,001	132.0	16.2	PDF	IES	5,001	133.7	16.2	PDF	IES	5,001	136.5	16.2	PDF	IES	5,001	139.6	16.2	PDF	IES
Tunable White	4000	30% DN/ 70% UP	30.0	4,002	129.9	15.4	PDF	IES	4,002	131.2	15.4	PDF	IES	4,002	133.3	15.4	PDF	IES	4,002	135.0	15.4	PDF	IES	4,002	137.7	15.4	PDF	IES	4,002	140.8	15.4	PDF	IES
Static White	8000	30% DN/ 70% UP	59.0	7,386	125.2	17.5	PDF	IES	7,669	130.0	17.7	PDF	IES	7,997	135.5	17.8	PDF	IES	8,030	136.1	17.8	PDF	IES	8,375	141.9	18.0	PDF	IES	-	-	-	-	-
Static White	7000	30% DN/ 70% UP	51.4	6,476	126.0	17.1	PDF	IES	6,723	130.8	17.2	PDF	IES	7,009	136.4	17.4	PDF	IES	7,035	136.9	17.4	PDF	IES	7,337	142.7	17.5	PDF	IES	-	-	-	-	-
Static White	6000	30% DN/ 70% UP	43.5	5,549	127.6	16.6	PDF	IES	5,759	132.4	16.7	PDF	IES	6,004	138.0	16.8	PDF	IES	6,022	138.4	16.8	PDF	IES	6,285	144.5	17.0	PDF	IES	-	-	-	-	-
Static White	5000	30% DN/ 70% UP	36.5	4,629	126.8	15.9	PDF	IES	4,804	131.6	16.1	PDF	IES	5,008	137.2	16.2	PDF	IES	5,018	137.5	16.2	PDF	IES	5,246	143.7	16.4	PDF	IES	-	-	-	-	-
Static White	4000	30% DN/ 70% UP	29.3	3,696	126.1	15.1	PDF	IES	3,836	130.9	15.3	PDF	IES	3,999	136.5	15.4	PDF	IES	4,002	136.6	15.4	PDF	IES	4,194	143.1	15.6	PDF	IES	-	-	-	-	-
Static White	3000	30% DN/ 70% UP	22.6	2,778	122.9	14.1	PDF	IES	2,882	127.5	14.3	PDF	IES	3,006	133.0	14.4	PDF	IES	3,003	132.9	14.4	PDF	IES	3,156	139.6	14.6	PDF	IES	-	-	-	-	-
Static White	2000	30% DN/ 70% UP	15.4	1,852	120.3	12.7	PDF	IES	1,919	124.6	12.9	PDF	IES	2,003	130.1	13.0	PDF	IES	1,998	129.7	13.0	PDF	IES	2,106	136.8	13.2	PDF	IES	-	-	-	-	-

Direct/Indirect (SL06) One Light Engine – AB (20% Down/80% Up)

Click "PDF" or "IES" text to download

Nominal CRI &CCT				CRI 90+, 2700K					CRI 90+, 3000K					CRI 90+, 3500K					CRI 90+, 4000K					CRI 90+, 5000K				
Nominal Lumen Package (lm/4ft)			Watts (W)[3]	Flux (lm/4ft)[1]	Efficacy (LPW)[1]	UGR[2]	Photometry Report	IES File	Flux (lm/4ft)[1]	Efficacy (LPW)[1]	UGR[2]	Photometry Report	IES File	Flux (lm/4ft)[1]	Efficacy (LPW)[1]	UGR[2]	Photometry Report	IES File	Flux (lm/4ft)[1]	Efficacy (LPW)[1]	UGR[2]	Photometry Report	IES File	Flux (lm/4ft)[1]	Efficacy (LPW)[1]	UGR[2]	Photometry Report	IES File
Static White	8000	20% DN/ 80% UP	59.0	7,756	131.5	14.2	PDF	IES	8,052	136.5	14.3	PDF	IES	8,396	142.3	14.5	PDF	IES	8,431	142.9	14.5	PDF	IES	8,793	149.0	14.7	PDF	IES
Static White	7000	20% DN/ 80% UP	51.4	6,800	132.3	13.8	PDF	IES	7,059	137.3	13.9	PDF	IES	7,360	143.2	14.0	PDF	IES	7,387	143.7	14.0	PDF	IES	7,704	149.9	14.2	PDF	IES
Static White	6000	20% DN/ 80% UP	43.5	5,826	133.9	13.2	PDF	IES	6,047	139.0	13.4	PDF	IES	6,304	144.9	13.5	PDF	IES	6,323	145.4	13.5	PDF	IES	6,599	151.7	13.7	PDF	IES
Static White	5000	20% DN/ 80% UP	36.5	4,860	133.2	12.6	PDF	IES	5,045	138.2	12.7	PDF	IES	5,259	144.1	12.9	PDF	IES	5,269	144.4	12.9	PDF	IES	5,508	150.9	13.0	PDF	IES
Static White	4000	20% DN/ 80% UP	29.3	3,881	132.5	11.8	PDF	IES	4,028	137.5	11.9	PDF	IES	4,199	143.3	12.1	PDF	IES	4,202	143.4	12.1	PDF	IES	4,404	150.3	12.3	PDF	IES
Static White	3000	20% DN/ 80% UP	22.6	2,917	129.1	10.8	PDF	IES	3,026	133.9	10.9	PDF	IES	3,156	139.6	11.1	PDF	IES	3,153	139.5	11.1	PDF	IES	3,314	146.6	11.3	PDF	IES
Static White	2000	20% DN/ 80% UP	15.4	1,945	126.3	9.4	PDF	IES	2,015	130.8	9.5	PDF	IES	2,103	136.6	9.7	PDF	IES	2,098	136.2	9.7	PDF	IES	2,211	143.6	9.9	PDF	IES

1. 4ft Luminaire photometry has been conducted in accordance with IES LM-79-08. IES files can be downloaded by clicking the links in the table above, or online at ledalite.com. Luminaires with finishes other than standard white may result in a drop in flux and efficacy.
2. Unified Glare Ratio (UGR) is calculated in accordance with CIE 117-1995. Reference conditions of 4Hx8Hx1H and reflectances of 70/50/20% have been applied using the procedure described in CIE 190-2010.
3. Input power stated at 3500K. BioUp & Tunable White, stated with Advance FlexTune SR driver & Interact Pro scalable wireless sensor, data may vary with other drivers.
4. BioUp delivers CRI 90+, 2700K-3000K, and CRI 80+, >3000K-5000K.

One Light Engine – AA (30% Down/%70 Up)
Spacing Criteria: 1.28/1.38

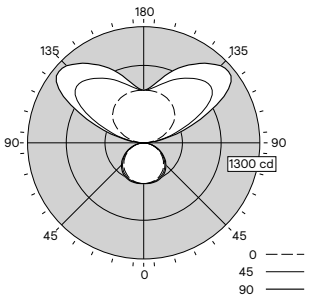

29% Down / 71% Up

One Light Engine – AB (20% Down/%80 Up)
Spacing Criteria: 1.28/1.43

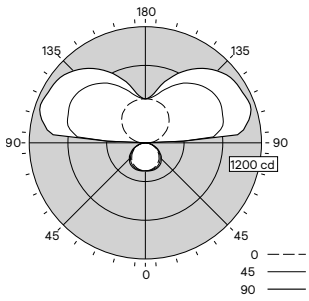

18% Down / 82% Up

Candela plots shown are for 5000lm/4ft, CRI 90, 3500K configurations.

SyncLine suspended

Photometry

Direct/Indirect (SL06) One Light Engine – AD (50% Down/50% Up)

Click "PDF" or "IES" text to download

Nominal CRI &CCT				CRI 90+, 2700K					CRI 90+, 3000K					CRI 90+ [4], 3500K					CRI 90+ [4], 4000K					CRI 90+ [4], 5000K					CRI 90+, 6500K				
Nominal Lumen Package (lm/4ft)			Watts (W)[3]	Flux (lm/4ft)[1]	Efficacy (LPW)[1]	UGR[2]	Photometry Report	IES File	Flux (lm/4ft)[1]	Efficacy (LPW)[1]	UGR[2]	Photometry Report	IES File	Flux (lm/4ft)[1]	Efficacy (LPW)[1]	UGR[2]	Photometry Report	IES File	Flux (lm/4ft)[1]	Efficacy (LPW)[1]	UGR[2]	Photometry Report	IES File	Flux (lm/4ft)[1]	Efficacy (LPW)[1]	UGR[2]	Photometry Report	IES File	Flux (lm/4ft)[1]	Efficacy (LPW)[1]	UGR[2]	Photometry Report	IES File
BioUp	4000	50% DN / 50% UP	31.5	3,999	131.1	19.1	PDF	IES	3,999	129.0	19.1	PDF	IES	3,999	127.1	19.1	PDF	IES	3,999	125.7	19.1	PDF	IES	3,999	123.7	19.1	PDF	IES	-	-	-	-	-
BioUp	3000	50% DN / 50% UP	23.1	2,998	133.2	18.1	PDF	IES	2,998	131.3	18.1	PDF	IES	2,998	129.7	18.1	PDF	IES	2,998	128.4	18.1	PDF	IES	2,998	126.6	18.1	PDF	IES	-	-	-	-	-
Tunable White	5000	50% DN / 50% UP	38.8	5,000	125.0	19.9	PDF	IES	5,000	126.6	19.9	PDF	IES	5,000	128.7	19.9	PDF	IES	5,000	130.5	19.9	PDF	IES	5,000	133.3	19.9	PDF	IES	5,000	136.4	19.9	PDF	IES
Tunable White	4000	50% DN / 50% UP	30.7	3,999	126.6	19.1	PDF	IES	3,999	128.2	19.1	PDF	IES	3,999	130.1	19.1	PDF	IES	3,999	131.8	19.1	PDF	IES	3,999	134.5	19.1	PDF	IES	3,999	137.6	19.1	PDF	IES
Static White	8000	50% DN / 50% UP	60.6	7,396	122.0	21.3	PDF	IES	7,679	126.7	21.4	PDF	IES	8,008	132.1	21.5	PDF	IES	8,041	132.7	21.5	PDF	IES	8,388	138.4	21.7	PDF	IES	-	-	-	-	-
Static White	7000	50% DN / 50% UP	52.6	6,466	122.9	20.8	PDF	IES	6,712	127.6	20.9	PDF	IES	6,998	133.0	21.1	PDF	IES	7,024	133.5	21.1	PDF	IES	7,325	139.3	21.2	PDF	IES	-	-	-	-	-
Static White	6000	50% DN / 50% UP	44.5	5,538	124.4	20.2	PDF	IES	5,749	129.2	20.4	PDF	IES	5,993	134.7	20.5	PDF	IES	6,011	135.1	20.5	PDF	IES	6,273	141.0	20.7	PDF	IES	-	-	-	-	-
Static White	5000	50% DN / 50% UP	37.3	4,617	123.8	19.6	PDF	IES	4,793	128.5	19.7	PDF	IES	4,996	133.9	19.9	PDF	IES	5,006	134.2	19.9	PDF	IES	5,233	140.3	20.0	PDF	IES	-	-	-	-	-
Static White	4000	50% DN / 50% UP	30.0	3,707	123.6	18.9	PDF	IES	3,848	128.3	19.0	PDF	IES	4,011	133.7	19.1	PDF	IES	4,014	133.8	19.1	PDF	IES	4,206	140.2	19.3	PDF	IES	-	-	-	-	-
Static White	3000	50% DN / 50% UP	23.0	2,763	120.1	17.8	PDF	IES	2,867	124.7	18.0	PDF	IES	2,990	130.0	18.1	PDF	IES	2,987	129.9	18.1	PDF	IES	3,139	136.5	18.3	PDF	IES	-	-	-	-	-
Static White	2000	50% DN / 50% UP	15.7	1,858	118.3	16.5	PDF	IES	1,926	122.7	16.6	PDF	IES	2,010	128.0	16.7	PDF	IES	2,005	127.7	16.7	PDF	IES	2,113	134.6	16.9	PDF	IES	-	-	-	-	-

Direct/Indirect (SL06) One Light Engine – AE (40% Down/60% Up)

Click "PDF" or "IES" text to download

Nominal CRI &CCT				CRI 90+, 2700K					CRI 90+, 3000K					CRI 90+, 3500K					CRI 90+, 4000K					CRI 90+, 5000K				
Nominal Lumen Package (lm/4ft)			Watts (W)[3]	Flux (lm/4ft)[1]	Efficacy (LPW)[1]	UGR[2]	Photometry Report	IES File	Flux (lm/4ft)[1]	Efficacy (LPW)[1]	UGR[2]	Photometry Report	IES File	Flux (lm/4ft)[1]	Efficacy (LPW)[1]	UGR[2]	Photometry Report	IES File	Flux (lm/4ft)[1]	Efficacy (LPW)[1]	UGR[2]	Photometry Report	IES File	Flux (lm/4ft)[1]	Efficacy (LPW)[1]	UGR[2]	Photometry Report	IES File
Static White	8000	40% DN/ 60% UP	60.6	7,777	128.3	19.4	PDF	IES	8,075	133.3	19.6	PDF	IES	8,420	138.9	19.7	PDF	IES	8,456	139.5	19.7	PDF	IES	8,820	145.5	19.9	PDF	IES
Static White	7000	40% DN/ 60% UP	52.6	6,799	129.3	19.0	PDF	IES	7,058	134.2	19.1	PDF	IES	7,358	139.9	19.2	PDF	IES	7,386	140.4	19.3	PDF	IES	7,702	146.4	19.4	PDF	IES
Static White	6000	40% DN/ 60% UP	44.5	5,823	130.9	18.4	PDF	IES	6,045	135.8	18.6	PDF	IES	6,302	141.6	18.7	PDF	IES	6,321	142.0	18.7	PDF	IES	6,596	148.2	18.9	PDF	IES
Static White	5000	40% DN/ 60% UP	37.3	4,855	130.2	17.8	PDF	IES	5,040	135.1	17.9	PDF	IES	5,254	140.9	18.1	PDF	IES	5,264	141.1	18.1	PDF	IES	5,503	147.5	18.2	PDF	IES
Static White	4000	40% DN/ 60% UP	30.0	3,898	129.9	17.0	PDF	IES	4,046	134.9	17.2	PDF	IES	4,218	140.6	17.3	PDF	IES	4,221	140.7	17.3	PDF	IES	4,422	147.4	17.5	PDF	IES
Static White	3000	40% DN/ 60% UP	23.0	2,905	126.3	16.0	PDF	IES	3,014	131.0	16.1	PDF	IES	3,144	136.7	16.3	PDF	IES	3,141	136.6	16.3	PDF	IES	3,300	143.5	16.5	PDF	IES
Static White	2000	40% DN/ 60% UP	15.7	1,954	124.5	14.6	PDF	IES	2,025	129.0	14.8	PDF	IES	2,113	134.6	14.9	PDF	IES	2,108	134.3	14.9	PDF	IES	2,221	141.5	15.1	PDF	IES

1. 4ft Luminaire photometry has been conducted in accordance with IES LM-79-08. IES files can be downloaded by clicking the links in the table above, or online at ledalite.com. Luminaires with finishes other than standard white may result in a drop in flux and efficacy.
2. Unified Glare Ratio (UGR) is calculated in accordance with CIE 117-1995. Reference conditions of 4Hx8Hx1H and reflectances of 70/50/20% have been applied using the procedure described in CIE 190-2010.
3. Input power stated at 3500K. BioUp & Tunable White, stated with Advance FlexTune SR driver & Interact Pro scalable wireless sensor, data may vary with other drivers.
4. BioUp delivers CRI 90+, 2700K-3000K, and CRI 80+, >3000K-5000K.

One Light Engine – AD (50% Down/%50 Up)
Spacing Criteria: 1.24/1.29

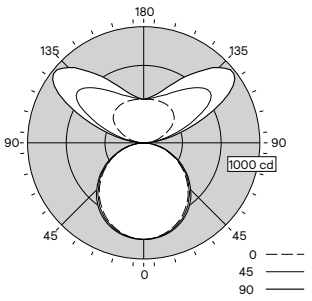

48% Down / 52% Up

One Light Engine – AE (40% Down/%60 Up)
Spacing Criteria: 1.23/1.29

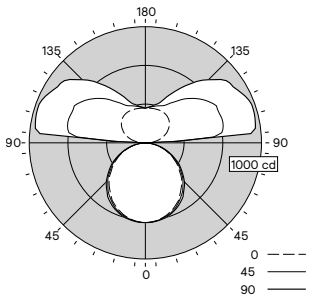

38% Down / 62% Up

Candela plots shown are for 5000lm/4ft, CRI 90, 3500K configurations.

SyncLine suspended

Photometry

Direct/Indirect (SL06) One Light Engine – AG (80% Down/20% Up)

Click “PDF” or “IES” text to download

Nominal CRI &CCT				CRI 90+, 2700K					CRI 90+, 3000K					CRI 90+ [4], 3500K					CRI 90+ [4], 4000K					CRI 90+ [4], 5000K					CRI 90+, 6500K				
Nominal Lumen Package (lm/4ft)			Watts (W)[3]	Flux (lm/4ft)[1]	Efficacy (LPW)[1]	UGR[2]	Photometry Report	IES File	Flux (lm/4ft)[1]	Efficacy (LPW)[1]	UGR[2]	Photometry Report	IES File	Flux (lm/4ft)[1]	Efficacy (LPW)[1]	UGR[2]	Photometry Report	IES File	Flux (lm/4ft)[1]	Efficacy (LPW)[1]	UGR[2]	Photometry Report	IES File	Flux (lm/4ft)[1]	Efficacy (LPW)[1]	UGR[2]	Photometry Report	IES File	Flux (lm/4ft)[1]	Efficacy (LPW)[1]	UGR[2]	Photometry Report	IES File
BioUp	4000	80% DN/ 20% UP	36.2	4,000	114.0	23.2	PDF	IES	4,000	112.2	23.2	PDF	IES	4,000	110.6	23.2	PDF	IES	4,000	109.3	23.2	PDF	IES	4,000	107.6	23.2	PDF	IES	-	-	-	-	-
	3000	80% DN/ 20% UP	26.4	3,000	117.2	22.2	PDF	IES	3,000	115.2	22.2	PDF	IES	3,000	113.6	22.2	PDF	IES	3,000	112.5	22.2	PDF	IES	3,000	110.8	22.2	PDF	IES	-	-	-	-	-
Tunable White	4000	80% DN/ 20% UP	35.0	4,000	111.1	23.2	PDF	IES	4,000	112.5	23.2	PDF	IES	4,000	114.2	23.2	PDF	IES	4,000	115.7	23.2	PDF	IES	4,000	118.1	23.2	PDF	IES	4,000	120.8	23.2	PDF	IES
	3000	80% DN/ 20% UP	26.0	2,999	112.3	22.2	PDF	IES	2,999	113.6	22.2	PDF	IES	2,999	115.3	22.2	PDF	IES	2,999	116.8	22.2	PDF	IES	2,999	119.1	22.2	PDF	IES	2,999	121.7	22.2	PDF	IES
Static White	5000	80% DN/ 20% UP	42.0	4,623	110.1	23.7	PDF	IES	4,798	114.2	23.8	PDF	IES	5,002	119.1	24.0	PDF	IES	5,016	119.4	24.0	PDF	IES	5,237	124.7	24.2	PDF	IES	-	-	-	-	-
	4000	80% DN/ 20% UP	33.8	3,704	109.6	22.9	PDF	IES	3,844	113.7	23.1	PDF	IES	4,008	118.6	23.2	PDF	IES	4,014	118.8	23.2	PDF	IES	4,199	124.2	23.4	PDF	IES	-	-	-	-	-
	3000	80% DN/ 20% UP	25.7	2,771	107.8	21.9	PDF	IES	2,876	111.9	22.1	PDF	IES	2,999	116.7	22.2	PDF	IES	2,998	116.7	22.2	PDF	IES	3,147	122.5	22.4	PDF	IES	-	-	-	-	-
	2000	80% DN/ 20% UP	17.4	1,850	106.3	20.5	PDF	IES	1,918	110.2	20.7	PDF	IES	2,001	115.0	20.8	PDF	IES	1,997	114.8	20.8	PDF	IES	2,103	120.9	21.0	PDF	IES	-	-	-	-	-

1. 4ft Luminaire photometry has been conducted in accordance with IES LM-79-08. IES files can be downloaded by clicking the links in the table above, or online at ledalite.com. Luminaires with finishes other than standard white may result in a drop in flux and efficacy.
2. Unified Glare Ratio (UGR) is calculated in accordance with CIE 117-1995. Reference conditions of 4Hx8Hx1H and reflectances of 70/50/20% have been applied using the procedure described in CIE 190-2010.
3. Input power stated at 3500K. BioUp & Tunable White, stated with Advance FlexTune SR driver & Interact Pro scalable wireless sensor, data may vary with other drivers.
4. BioUp delivers CRI 90+, 2700K-3000K, and CRI 80+, >3000K-5000K

One Light Engine – AG (80% Down/%20 Up)
Spacing Criteria: 1.21/1.23

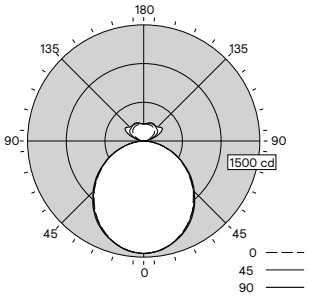

80% Down / 20% Up

Candela plots shown are for 5000lm/4ft, CRI 90, 3500K configurations.

SyncLine suspended

Photometry

Direct/Indirect (SL16) Two Light Engines – AN

Click “PDF” or “IES” text to download

Nominal CRI &CCT	Nominal Lumen Package (lm/4ft) Direct	Nominal Lumen Package (lm/4ft) Indirect	Watts (W)[3]	CRI 90+, 2700K Flux (lm/4ft)[1]	Efficacy (LPW)[1]	UGR[2]	Photometry Report	IES File	CRI 90+, 3000K Flux (lm/4ft)[1]	Efficacy (LPW)[1]	UGR[2]	Photometry Report	IES File	CRI 90+, 3500K Flux (lm/4ft)[1]	Efficacy (LPW)[1]	UGR[2]	Photometry Report	IES File	CRI 90+, 4000K Flux (lm/4ft)[1]	Efficacy (LPW)[1]	UGR[2]	Photometry Report	IES File	CRI 90+, 5000K Flux (lm/4ft)[1]	Efficacy (LPW)[1]	UGR[2]	Photometry Report	IES File	CRI 90+, 6500K Flux (lm/4ft)[1]	Efficacy (LPW)[1]	UGR[2]	Photometry Report	IES File
Tunable White	4000	5000	77.8	8,998	112.3	20.7	PDF	IES	8,998	113.7	20.7	PDF	IES	8,998	115.7	20.7	PDF	IES	8,998	117.3	20.7	PDF	IES	8,998	120.0	20.7	PDF	IES	8,998	123.1	20.7	PDF	IES
Tunable White	4000	4000	68.7	8,001	113.2	21.3	PDF	IES	8,001	114.6	21.3	PDF	IES	8,001	116.5	21.3	PDF	IES	8,001	118.1	21.3	PDF	IES	8,001	120.7	21.3	PDF	IES	8,001	123.7	21.3	PDF	IES
Tunable White	3500	5000	72.7	8,499	113.5	19.9	PDF	IES	8,499	114.9	19.9	PDF	IES	8,499	116.9	19.9	PDF	IES	8,499	118.5	19.9	PDF	IES	8,499	121.2	19.9	PDF	IES	8,499	124.2	19.9	PDF	IES
Tunable White	3500	4000	63.6	7,501	114.7	20.5	PDF	IES	7,501	116.0	20.5	PDF	IES	7,501	117.9	20.5	PDF	IES	7,501	119.5	20.5	PDF	IES	7,501	122.1	20.5	PDF	IES	7,501	125.1	20.5	PDF	IES
Tunable White	3000	5000	67.8	7,998	114.4	19.0	PDF	IES	7,998	115.9	19.0	PDF	IES	7,998	117.9	19.0	PDF	IES	7,998	119.5	19.0	PDF	IES	7,998	122.2	19.0	PDF	IES	7,998	125.3	19.0	PDF	IES
Tunable White	3000	4000	58.7	7,001	115.9	19.6	PDF	IES	7,001	117.3	19.6	PDF	IES	7,001	119.2	19.6	PDF	IES	7,001	120.8	19.6	PDF	IES	7,001	123.4	19.6	PDF	IES	7,001	126.4	19.6	PDF	IES
Static White	4000	7000	91.4	10,131	110.8	19.6	PDF	IES	10,515	115.0	19.8	PDF	IES	10,992	120.3	19.8	PDF	IES	11,018	120.5	19.8	PDF	IES	11,533	126.2	20.0	PDF	IES	-	-	-	-	-
Static White	4000	6000	82.4	9,221	111.9	20.0	PDF	IES	9,575	116.2	20.1	PDF	IES	9,998	121.3	20.3	PDF	IES	10,020	121.6	20.3	PDF	IES	10,489	127.3	20.5	PDF	IES	-	-	-	-	-
Static White	4000	5000	74.2	8,313	112.0	20.5	PDF	IES	8,633	116.3	20.6	PDF	IES	9,004	121.3	20.7	PDF	IES	9,030	121.7	20.7	PDF	IES	9,443	127.3	20.9	PDF	IES	-	-	-	-	-
Static White	4000	4000	66.2	7,391	111.6	21.0	PDF	IES	7,674	115.9	21.2	PDF	IES	7,999	120.8	21.3	PDF	IES	8,024	121.2	21.3	PDF	IES	8,384	126.6	21.5	PDF	IES	-	-	-	-	-
Static White	4000	3000	58.9	6,459	109.7	21.7	PDF	IES	6,705	113.8	21.8	PDF	IES	6,989	118.7	22.0	PDF	IES	7,006	118.9	22.0	PDF	IES	7,321	124.3	22.1	PDF	IES	-	-	-	-	-
Static White	4000	2000	51.3	5,547	108.1	22.5	PDF	IES	5,756	112.2	22.6	PDF	IES	6,003	117.0	22.7	PDF	IES	6,010	117.2	22.7	PDF	IES	6,286	122.5	22.9	PDF	IES	-	-	-	-	-
Static White	4000	1000	44.9	4,610	102.7	23.5	PDF	IES	4,783	106.5	23.6	PDF	IES	4,989	111.1	23.8	PDF	IES	4,991	111.2	23.8	PDF	IES	5,226	116.4	23.9	PDF	IES	-	-	-	-	-
Static White	3500	7000	86.9	9,670	111.3	18.8	PDF	IES	10,035	115.5	18.9	PDF	IES	10,493	120.7	19.1	PDF	IES	10,515	121.0	19.0	PDF	IES	11,012	126.7	19.1	PDF	IES	-	-	-	-	-
Static White	3500	6000	77.8	8,759	112.6	19.1	PDF	IES	9,096	116.9	19.3	PDF	IES	9,499	122.1	19.4	PDF	IES	9,517	122.3	19.4	PDF	IES	9,968	128.1	19.6	PDF	IES	-	-	-	-	-
Static White	3500	5000	69.7	7,851	112.6	19.7	PDF	IES	8,154	117.0	19.8	PDF	IES	8,505	122.0	19.9	PDF	IES	8,527	122.3	19.9	PDF	IES	8,922	128.0	20.1	PDF	IES	-	-	-	-	-
Static White	3500	4000	61.8	6,929	112.1	20.2	PDF	IES	7,195	116.4	20.4	PDF	IES	7,499	121.3	20.5	PDF	IES	7,521	121.7	20.5	PDF	IES	7,863	127.2	20.7	PDF	IES	-	-	-	-	-
Static White	3500	3000	54.6	5,997	109.8	20.9	PDF	IES	6,226	114.0	21.1	PDF	IES	6,489	118.8	21.2	PDF	IES	6,503	119.1	21.2	PDF	IES	6,800	124.5	21.4	PDF	IES	-	-	-	-	-
Static White	3500	2000	46.9	5,085	108.4	21.7	PDF	IES	5,277	112.5	21.9	PDF	IES	5,503	117.3	22.0	PDF	IES	5,506	117.4	22.0	PDF	IES	5,765	122.9	22.2	PDF	IES	-	-	-	-	-
Static White	3500	1000	40.6	4,149	102.2	22.9	PDF	IES	4,303	106.0	23.1	PDF	IES	4,490	110.6	23.2	PDF	IES	4,488	110.5	23.2	PDF	IES	4,705	115.9	23.4	PDF	IES	-	-	-	-	-
Static White	3000	7000	82.4	9,205	111.7	17.8	PDF	IES	9,552	115.9	17.9	PDF	IES	9,989	121.2	18.0	PDF	IES	10,009	121.5	18.0	PDF	IES	10,487	127.3	18.2	PDF	IES	-	-	-	-	-
Static White	3000	6000	73.4	8,294	113.0	18.3	PDF	IES	8,613	117.3	18.4	PDF	IES	8,996	122.6	18.4	PDF	IES	9,010	122.8	18.4	PDF	IES	9,443	128.7	18.6	PDF	IES	-	-	-	-	-
Static White	3000	5000	65.2	7,386	113.3	18.7	PDF	IES	7,671	117.7	18.9	PDF	IES	8,001	122.7	19.0	PDF	IES	8,020	123.0	18.9	PDF	IES	8,397	128.8	19.1	PDF	IES	-	-	-	-	-
Static White	3000	4000	57.5	6,464	112.4	19.3	PDF	IES	6,712	116.7	19.4	PDF	IES	6,996	121.7	19.6	PDF	IES	7,674	115.9	21.2	PDF	IES	7,338	127.6	19.7	PDF	IES	-	-	-	-	-
Static White	3000	3000	50.3	5,532	110.0	20.0	PDF	IES	5,743	114.2	20.2	PDF	IES	5,986	119.0	20.3	PDF	IES	5,997	119.2	20.3	PDF	IES	6,275	124.8	20.5	PDF	IES	-	-	-	-	-
Static White	3000	2000	42.6	4,620	108.5	20.9	PDF	IES	4,794	112.5	21.0	PDF	IES	5,000	117.4	21.2	PDF	IES	5,000	117.4	21.2	PDF	IES	5,240	123.0	21.4	PDF	IES	-	-	-	-	-
Static White	3000	1000	36.3	3,684	101.5	22.1	PDF	IES	3,820	105.2	22.3	PDF	IES	3,986	109.8	22.4	PDF	IES	3,982	109.7	22.4	PDF	IES	4,180	115.2	22.6	PDF	IES	-	-	-	-	-
Static White	2500	7000	78.2	8,756	112.0	16.6	PDF	IES	9,087	116.2	16.8	PDF	IES	9,504	121.5	16.9	PDF	IES	9,521	121.8	16.9	PDF	IES	9,981	127.6	17.1	PDF	IES	-	-	-	-	-
Static White	2500	6000	69.2	7,846	113.4	17.1	PDF	IES	8,147	117.7	17.2	PDF	IES	8,510	123.0	17.3	PDF	IES	8,523	123.2	17.3	PDF	IES	8,936	129.1	17.5	PDF	IES	-	-	-	-	-
Static White	2500	5000	61.2	6,938	113.4	17.6	PDF	IES	7,205	117.7	17.8	PDF	IES	7,516	122.8	17.9	PDF	IES	7,533	123.1	17.8	PDF	IES	7,890	128.9	18.1	PDF	IES	-	-	-	-	-
Static White	2500	4000	53.5	6,016	112.4	18.2	PDF	IES	6,246	116.7	18.4	PDF	IES	6,511	121.7	18.5	PDF	IES	6,527	122.0	18.5	PDF	IES	6,831	127.7	18.7	PDF	IES	-	-	-	-	-
Static White	2500	3000	46.3	5,084	109.8	18.9	PDF	IES	5,277	114.0	19.1	PDF	IES	5,501	118.8	19.2	PDF	IES	5,509	119.0	19.2	PDF	IES	5,769	124.6	19.4	PDF	IES	-	-	-	-	-
Static White	2500	2000	38.6	4,172	108.1	20.0	PDF	IES	4,328	112.1	20.1	PDF	IES	4,515	117.0	20.2	PDF	IES	4,512	116.9	20.2	PDF	IES	4,733	122.6	20.4	PDF	IES	-	-	-	-	-
Static White	2500	1000	32.3	3,235	100.2	21.3	PDF	IES	3,354	103.8	21.4	PDF	IES	3,501	108.4	21.6	PDF	IES	3,494	108.2	21.5	PDF	IES	3,673	113.7	21.7	PDF	IES	-	-	-	-	-
Static White	2000	7000	73.5	8,286	112.7	15.1	PDF	IES	8,598	117.0	15.3	PDF	IES	8,995	122.4	15.4	PDF	IES	9,010	122.6	15.4	PDF	IES	9,448	128.5	15.6	PDF	IES	-	-	-	-	-
Static White	2000	6000	64.5	7,376	114.4	15.6	PDF	IES	7,658	118.7	15.8	PDF	IES	8,001	124.0	15.9	PDF	IES	8,012	124.2	15.8	PDF	IES	8,403	130.3	16.1	PDF	IES	-	-	-	-	-
Static White	2000	5000	56.3	6,467	114.9	16.2	PDF	IES	6,716	119.3	16.3	PDF	IES	7,007	124.5	16.5	PDF	IES	7,022	124.7	16.4	PDF	IES	7,357	130.7	16.6	PDF	IES	-	-	-	-	-
Static White	2000	4000	48.5	5,545	114.3	16.9	PDF	IES	5,757	118.7	16.9	PDF	IES	6,002	123.8	17.0	PDF	IES	6,016	124.0	17.0	PDF	IES	6,298	129.9	17.3	PDF	IES	-	-	-	-	-
Static White	2000	3000	41.3	4,614	111.7	17.6	PDF	IES	4,788	115.9	17.7	PDF	IES	4,991	120.8	17.9	PDF	IES	4,998	121.0	17.9	PDF	IES	5,236	126.8	18.1	PDF	IES	-	-	-	-	-
Static White	2000	2000	33.9	3,701	109.2	18.6	PDF	IES	3,839	113.2	18.8	PDF	IES	4,005	118.1	18.9	PDF	IES	4,001	118.0	18.9	PDF	IES	4,200	123.9	19.1	PDF	IES	-	-	-	-	-
Static White	2000	1000	27.3	2,765	101.3	20.1	PDF	IES	2,865	104.9	20.3	PDF	IES	2,992	109.6	20.4	PDF	IES	2,983	109.3	20.4	PDF	IES	3,140	115.0	20.6	PDF	IES	-	-	-	-	-
Static White	1500	7000	69.5	7,833	112.7	13.4	PDF	IES	8,127	116.9	13.5	PDF	IES	8,505	122.4	13.5	PDF	IES	8,519	122.6	13.5	PDF	IES	8,933	128.5	13.7	PDF	IES	-	-	-	-	-
Static White	1500	6000	60.4	6,923	114.6	13.8	PDF	IES	7,187	119.0	14.0	PDF	IES	7,511	124.4	14.1	PDF	IES	7,521	124.5	14.0	PDF	IES	7,889	130.6	14.3	PDF	IES	-	-	-	-	-
Static White	1500	5000	52.3	6,015	115.0	14.3	PDF	IES	6,245	119.4	14.5	PDF	IES	6,517	124.6	14.6	PDF	IES	6,531	124.9	14.6	PDF	IES	6,842	130.8	14.8	PDF	IES	-	-	-	-	-
Static White	1500	4000	44.6	5,093	114.2	15.1	PDF	IES	5,286	118.5	15.1	PDF	IES	5,511	123.6	15.3	PDF	IES	5,525	123.9	15.2	PDF	IES	5,784	129.7	15.5	PDF	IES	-	-	-	-	-
Static White	1500	3000	37.4	4,161	111.3	15.9	PDF	IES	4,317	115.4	16.0	PDF	IES	4,501	120.3	16.1	PDF	IES	4,507	120.5	16.1	PDF	IES	4,721	126.2	16.3	PDF	IES	-	-	-	-	-
Static White	1500	2000	30	3,249	108.3	16.9	PDF	IES	3,368	112.3	17.0	PDF	IES	3,515	117.2	17.2	PDF	IES	3,510	117.0	17.2	PDF	IES	3,686	122.9	17.4	PDF	IES	-	-	-	-	-
Static White	1500	1000	23.4	2,312	98.8	18.6	PDF	IES	2,394	102.3	18.7	PDF	IES	2,502	106.9	18.9	PDF	IES	2,492	106.5	18.9	PDF	IES	2,626	112.2	19.1	PDF	IES	-	-	-	-	-
Static White	1000	7000	65.3	7,360	112.7	10.5	PDF	IES	7,633	116.9	10.7	PDF	IES	7,991	122.4	10.8	PDF	IES	8,006	122.6	10.7	PDF	IES	8,393	128.5	11.0	PDF	IES	-	-	-	-	-
Static White	1000	6000	56.3	6,449	114.5	11.1	PDF	IES	6,693	118.9	11.1	PDF	IES	6,997	124.3	11.3	PDF	IES	7,008	124.5	11.3	PDF	IES	7,348	130.5	11.4	PDF	IES	-	-	-	-	-
Static White	1000	5000	48.3	5,541	114.7	11.6	PDF	IES	5,751	119.1	11.7	PDF	IES	6,003	124.3	11.8	PDF	IES	6,018	124.6	11.8	PDF	IES	6,302	130.5	12.0	PDF	IES	-	-	-	-	-
Static White	1000	4000	40.6	4,619	113.8	12.3	PDF	IES	4,792	118.0	12.4	PDF	IES	4,997	123.1	12.6	PDF	IES	5,012	123.4	12.5	PDF	IES	5,243	129.1	12.8	PDF	IES	-	-	-	-	-
Static White	1000	3000	33.4	3,687	110.4	13.2	PDF	IES	3,823	114.5	13.3	PDF	IES	3,987	119.4	13.5	PDF	IES	3,994	119.6	13.4	PDF	IES	4,181	125.2	13.7	PDF	IES	-	-	-	-	-
Static White	1000	2000	25.9	2,775	107.1	14.3	PDF	IES	2,874	111.0	14.5	PDF	IES	3,001	115.9	14.6	PDF	IES	2,997	115.7	14.6	PDF	IES	3,145	121.4	14.8	PDF	IES	-	-	-	-	-
Static White	1000	1000	19.4	1,839	94.8	16.2	PDF	IES	1,901	98.0	16.3	PDF	IES	1,988	102.5	16.5	PDF	IES	1,979	102.0	16.5	PDF	IES	2,085	107.5	16.7	PDF	IES	-	-	-	-	-

1. 4ft Luminaire photometry has been conducted in accordance with IES LM-79-08. IES files can be downloaded by clicking the links in the table above, or online at ledalite.com. Luminaires with finishes other than standard white may result in a drop in flux and efficacy.
2. Unified Glare Ratio (UGR) is calculated in accordance with CIE 117-1995. Reference conditions of 4Hx8Hx1H and reflectances of 70/50/20% have been applied using the procedure described in CIE 190-2010.
3. Input power stated at 3500K. BioUp & Tunable White, stated with Advance FlexTune SR driver & Interact Pro scalable wireless sensor, data may vary with other drivers.

Two Light Engines*
AN (1000 lm Down/7000 lm Up)
Spacing Criteria: 1.20/1.21

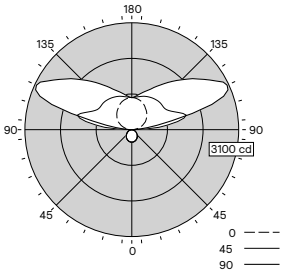

12% Down / 88% Up

Two Light Engines*
AN (4000 lm Down/1000 lm Up)
Spacing Criteria: 1.20/1.21

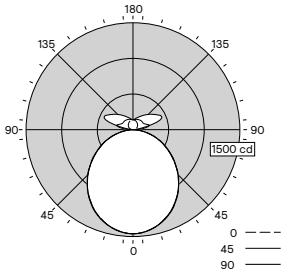

Other distributions available

*Candela plots shown are for 8000lm/4ft & 5000lm/4ft CRI 90, 3500K configurations.

Footnotes from page 1 ordering guide

1. Nominal values within a range. Not all lumen packages are available with all configurations. Consult photometry data for CRI, color temp, lumens & distribution of chosen configuration.
2. Not all wiring types are available with all configurations. Consult Ledalite for a complete list of available options.
3. 347V Only available with Advance Xitanium 0-10V (1% Dim) driver. Not available with other Drivers, Battery Pack, GTD, Interact Pro options. Battery packs available for UNV 120-277V drivers, lumen package limits may apply, check with Ledalite.
4. Interact Pro options require separate controls hardware by Signify.
5. Tunable White and BioUp options are available with Interact Pro wireless or with 2ch 0-10V or DALI-2 (DT6 or DT8) wired drivers. Please enquire about options such as Lutron T Series or DMX control (extended lead times may apply).
6. Auxiliary Wiring not available with Interact Pro luminaires. Aux sections are wired to one fixture end only.
7. Sensors must be combined with a Sensor Ready driver option. Default sensor colour is white, fixtures with black finish have black sensors. (Consult factory for other combinations).
8. Luminaires are pre-wired to both ends with quick wire connectors at one end for standard circuit & battery pack trigger wire (if applicable). Each circuit has its own neutral conductor. All circuits are clearly labelled at each end.
9. Must order IRT9015 Interact commissioning remote with each system order.
10. One Light Engine options only support single circuit. Two Light Engine options support single or dual circuits.
11. Other options not shown here may also be possible via a custom request. Extended lead times and minimum order quantities may apply, please consult factory.
12. UL924 listed sensor bypass relay is factory installed between driver & sensor. Must be ordered in same module as integral sensing option. Must be installed in conjunction with a UL1008 device.
13. Signify sensor options shown in the order guide. Third party sensors also available, please enquire about options for Lutron Athena, Vive, or others.

Note: Due to continuing product improvements, Ledalite reserves the right to change the specifications without notice.

© 2025 Signify Holding. All rights reserved. The information provided herein is subject to change, without notice. Signify does not give any representation or warranty as to the accuracy or completeness of the information included herein and shall not be liable for any action in reliance thereon. The information presented in this document is not intended as any commercial offer and does not form part of any quotation or contract, unless otherwise agreed by Signify.

GENLYTE SOLUTIONS
a signify business

Signify North America Corp.
400 Crossing Blvd, Suite 600
Bridgewater, NJ 08807
Telephone: 800-555-0050

Signify Canada Ltd.
281 Hillmount Road,
Markham, ON, Canada L6C 2S3
Telephone: 800-668-9008

All trademarks are owned by Signify Holding or their respective owners.